WORLD ROBOT OLYMPIAD ™

RoboMissionSenior 2026

Building Instructions

ROBOTS MEET CULTURE

1

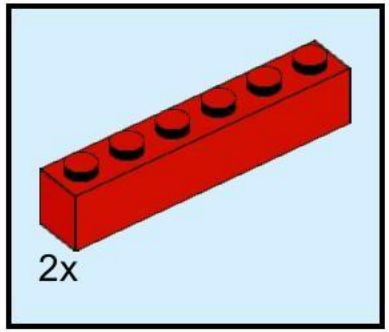

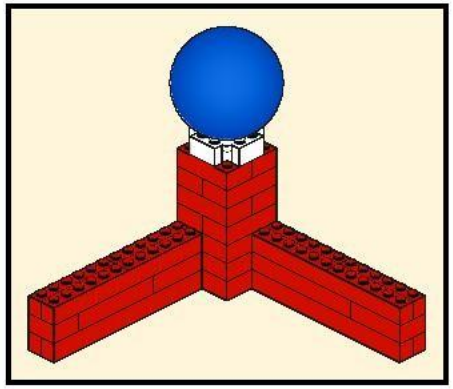

2x

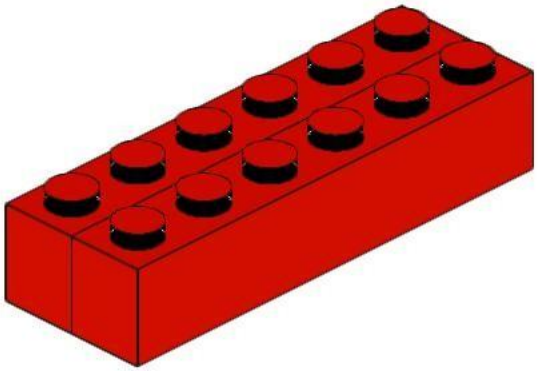

2

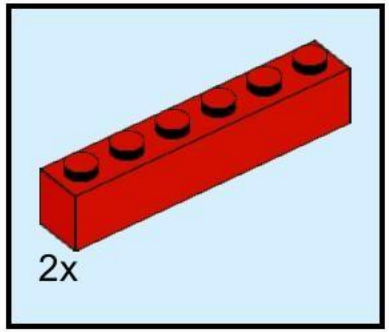

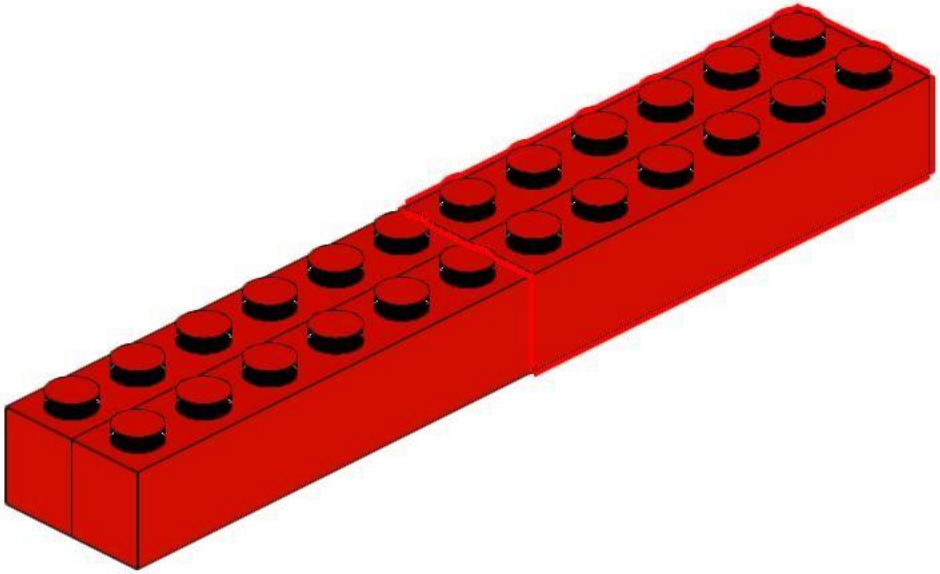

3

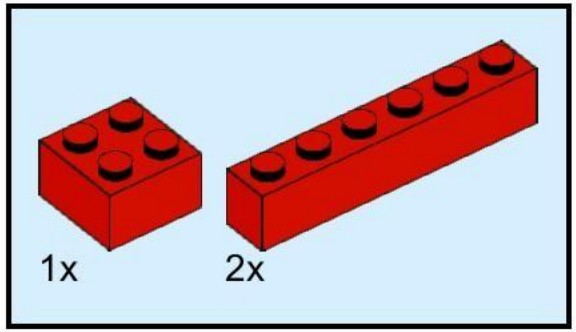

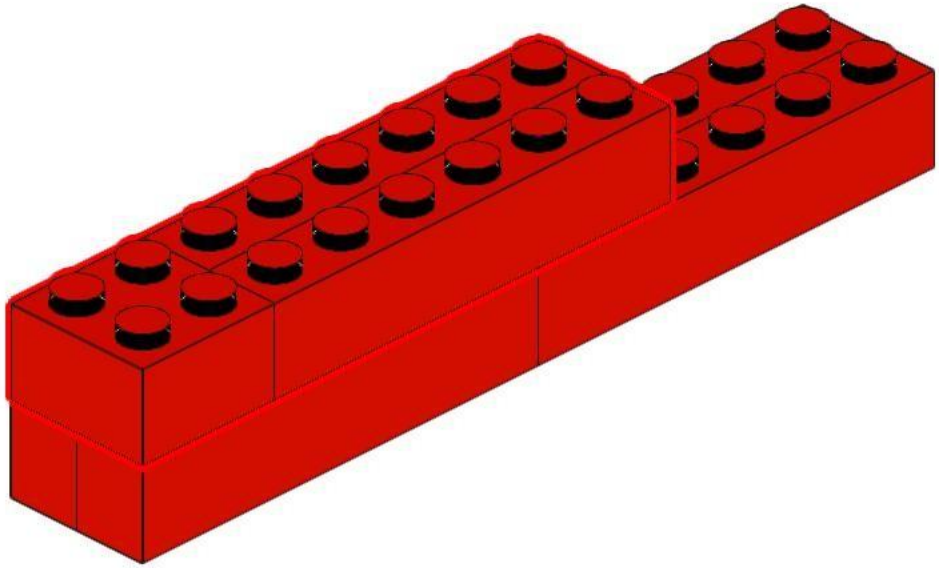

4

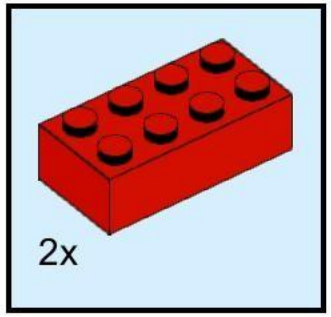

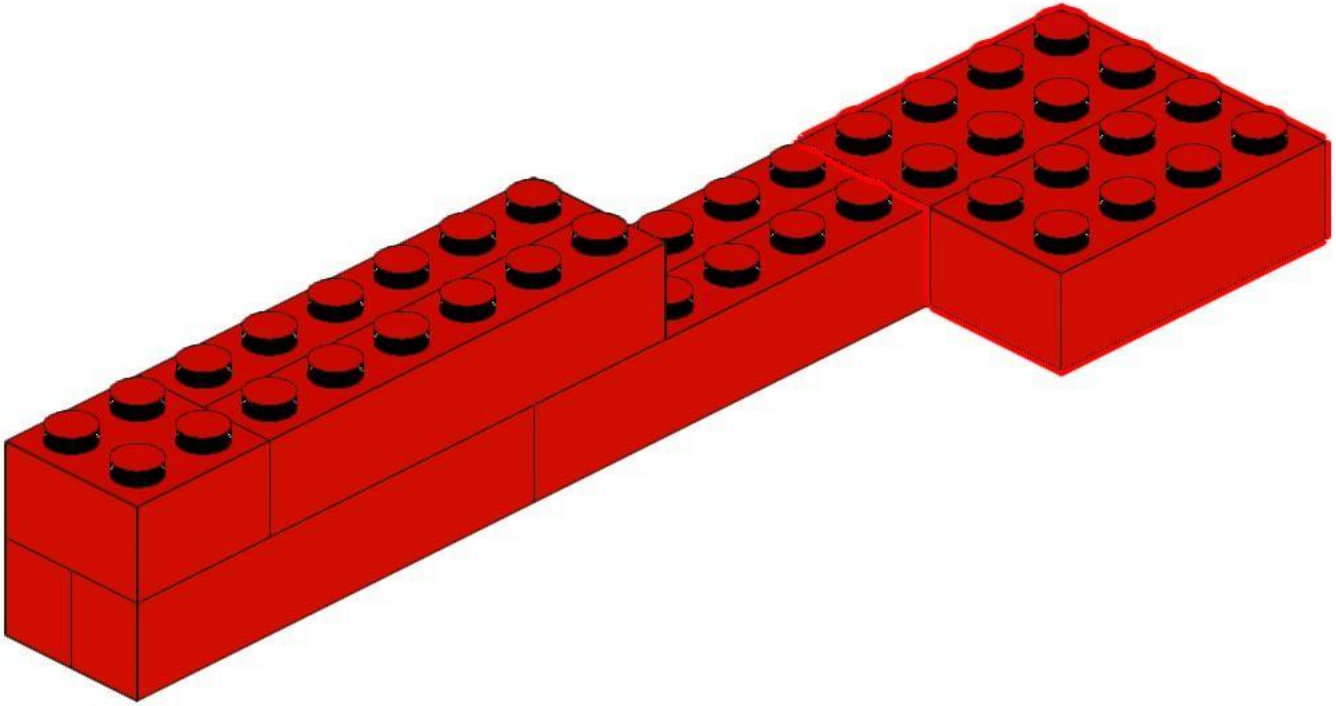

5

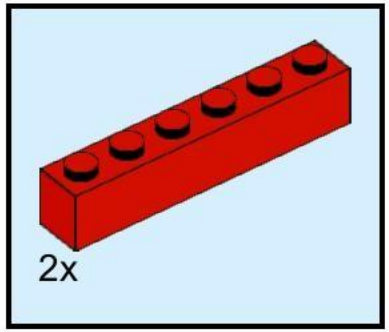

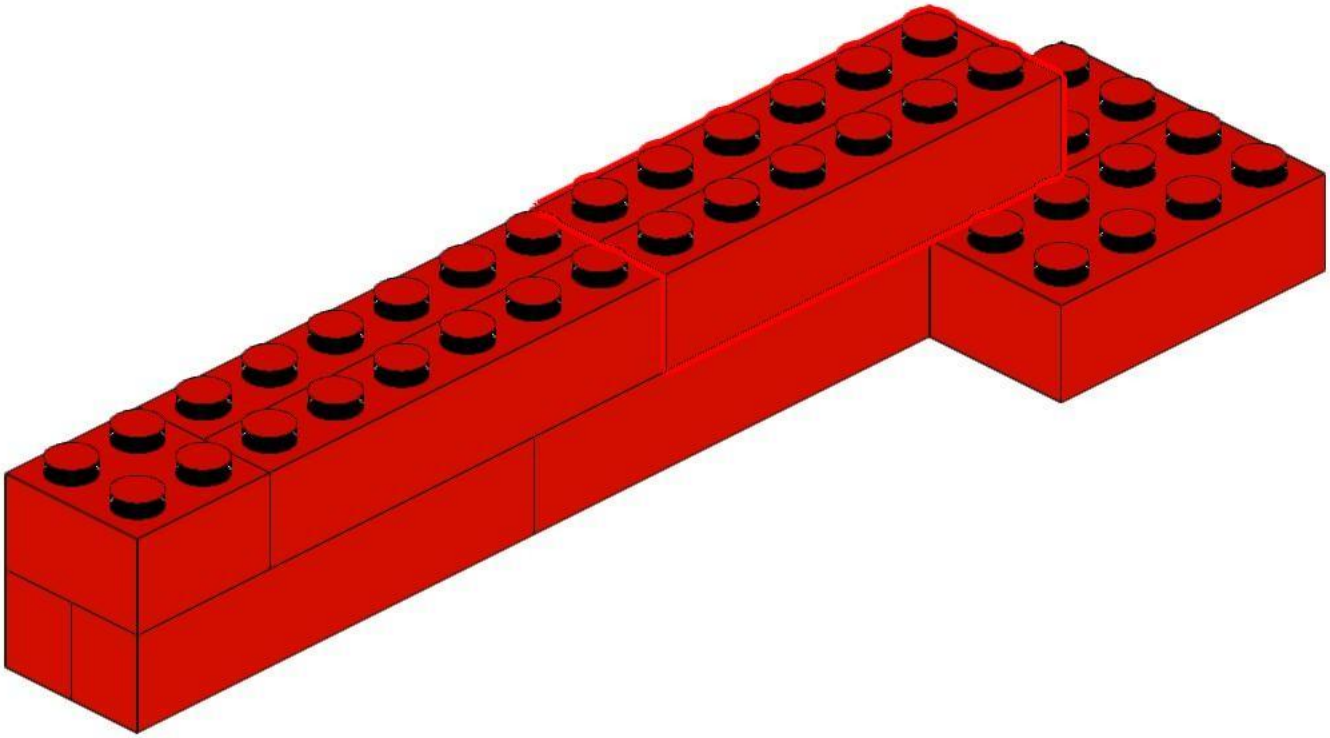

6

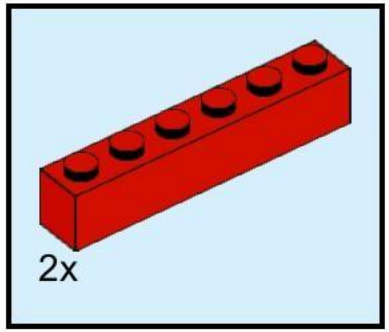

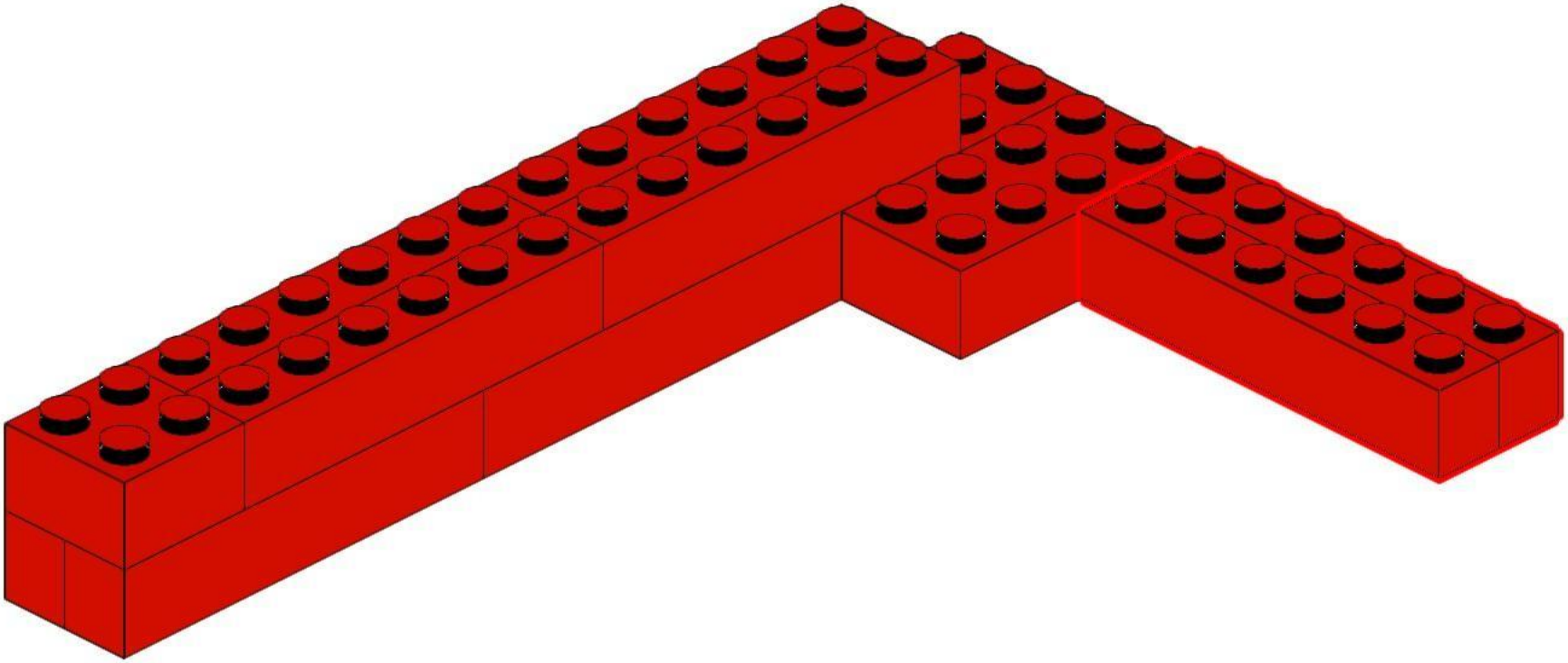

7

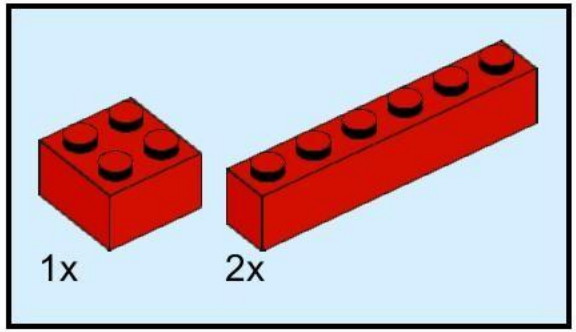

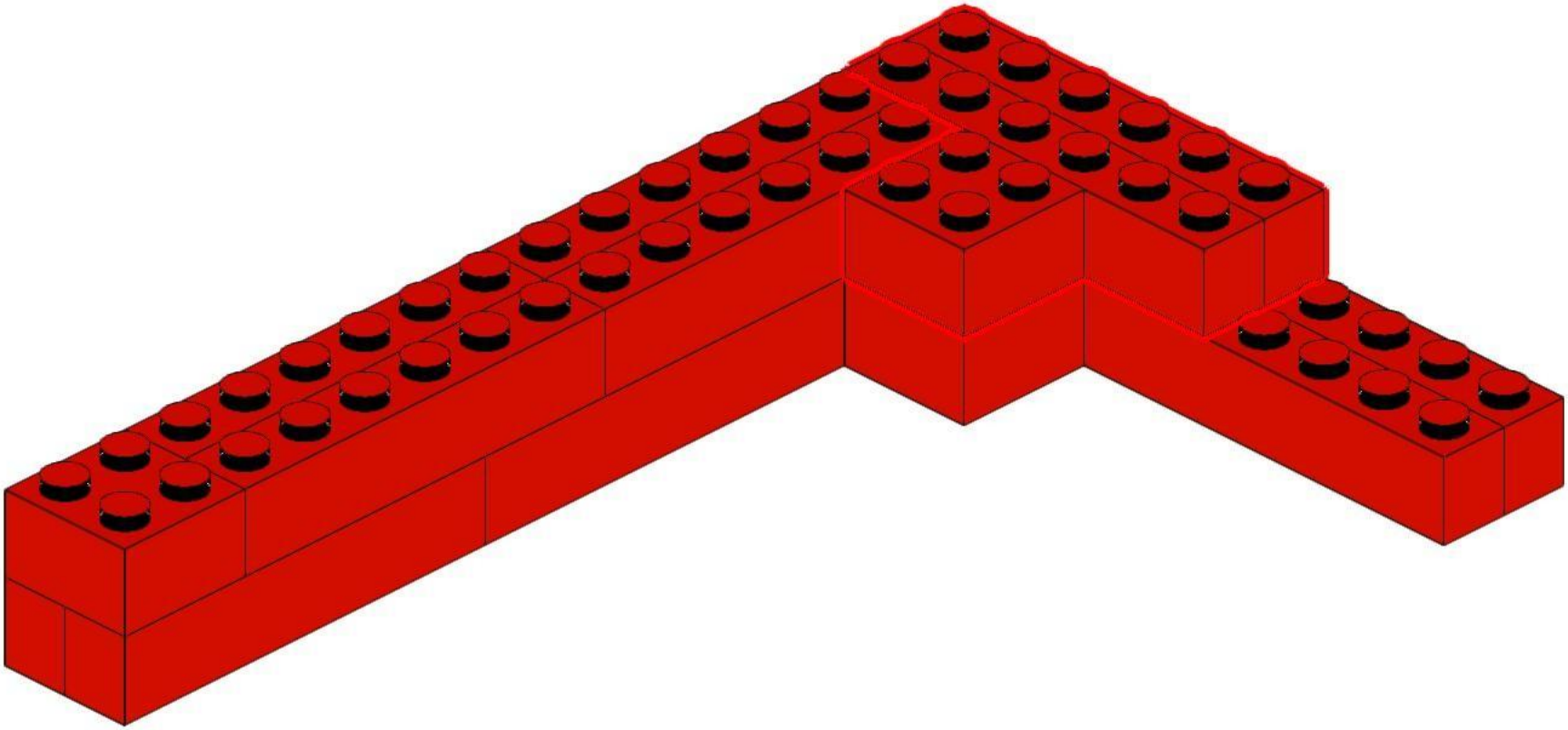

8

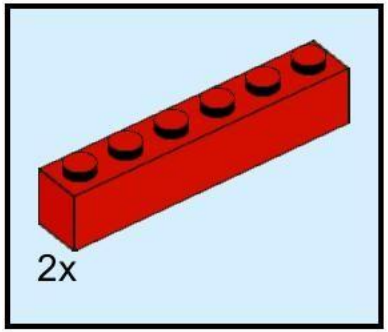

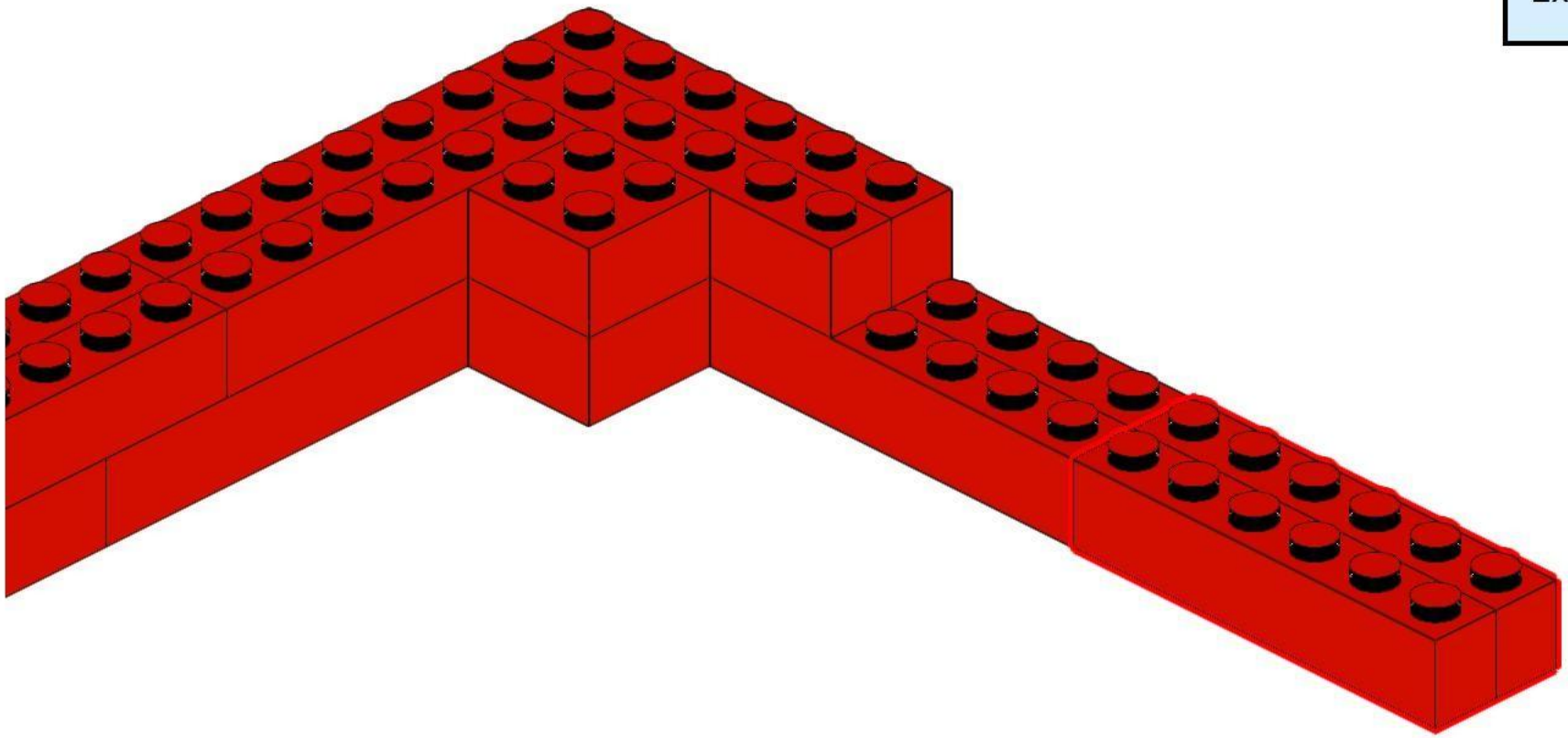

9

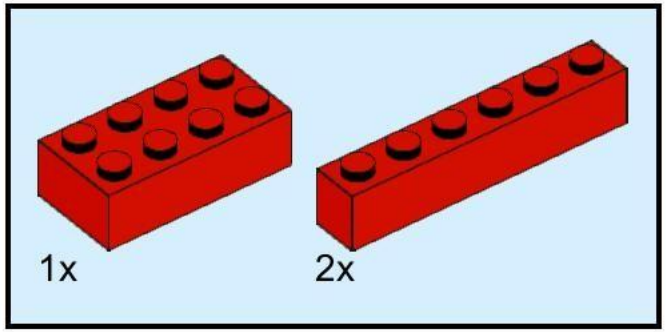

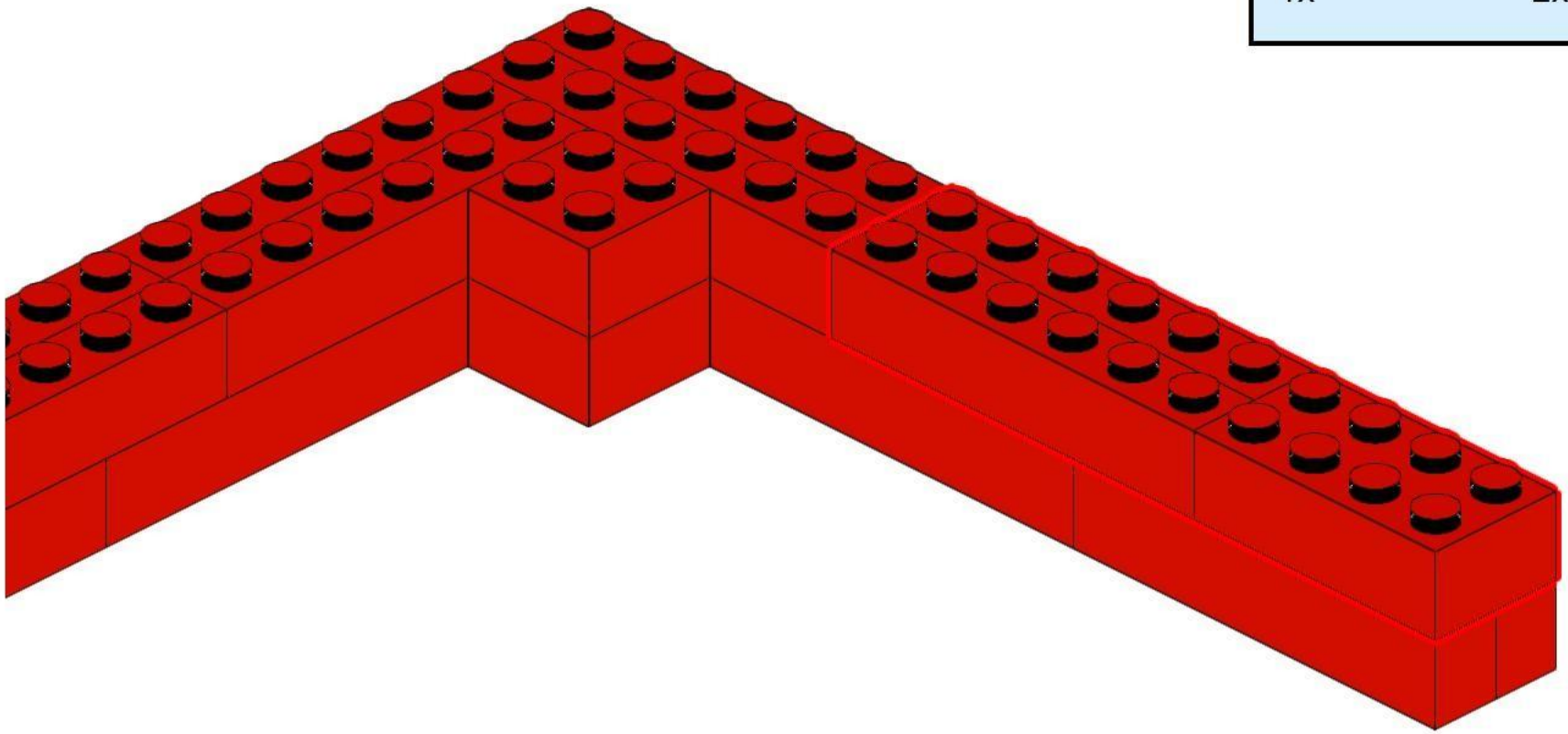

10

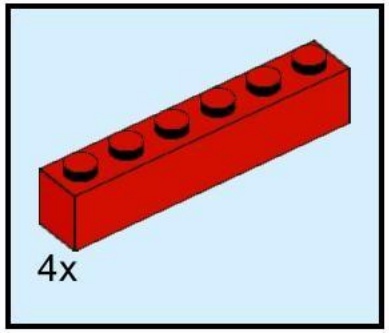

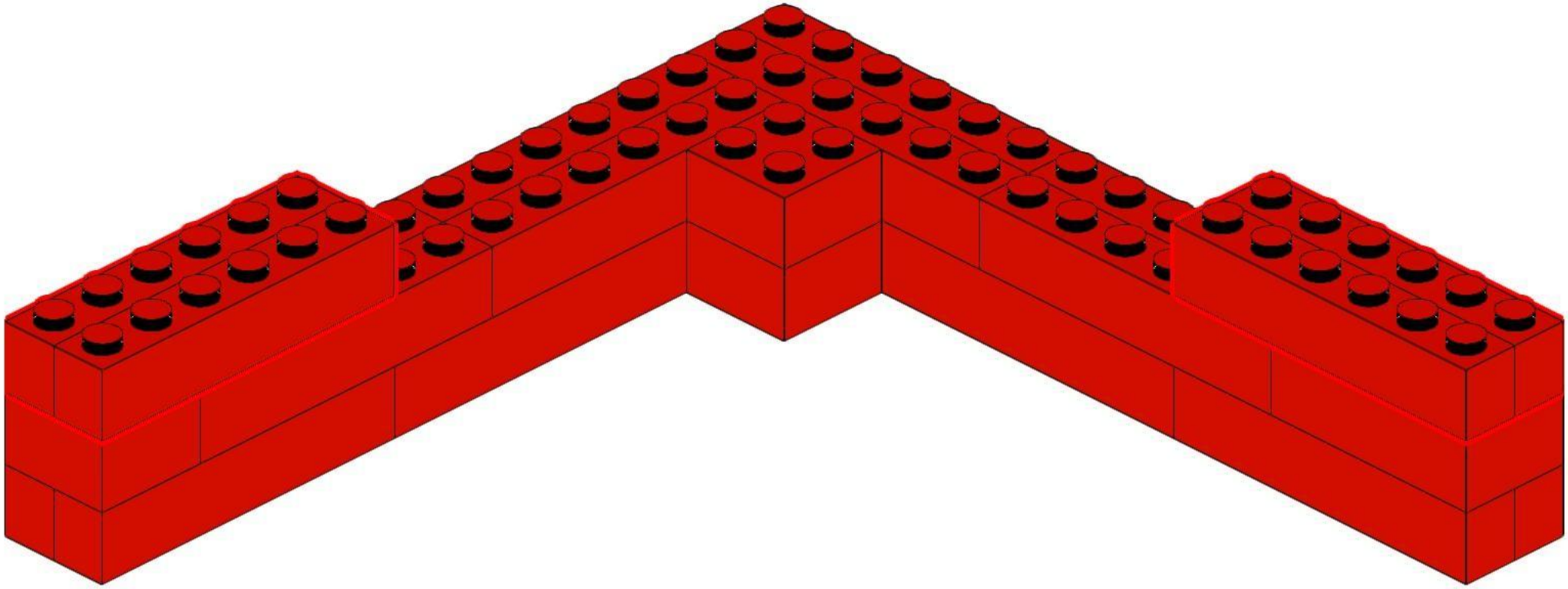

11

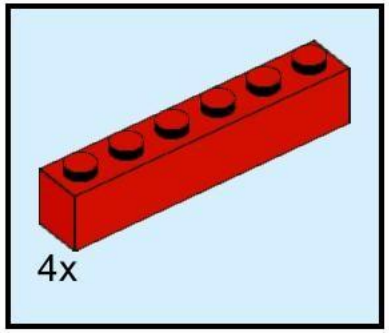

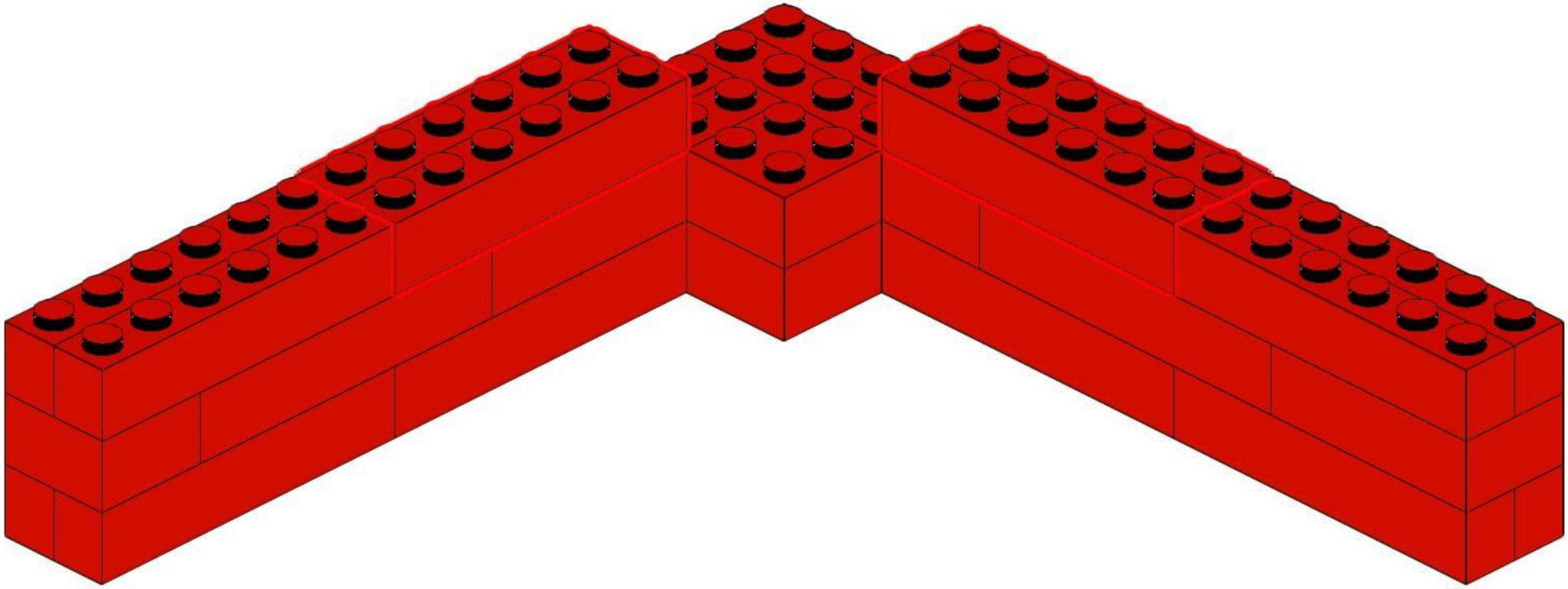

12

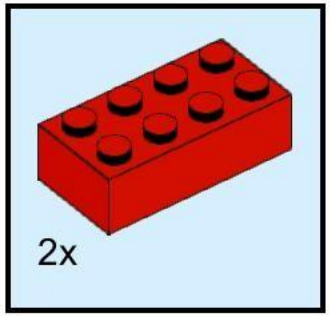

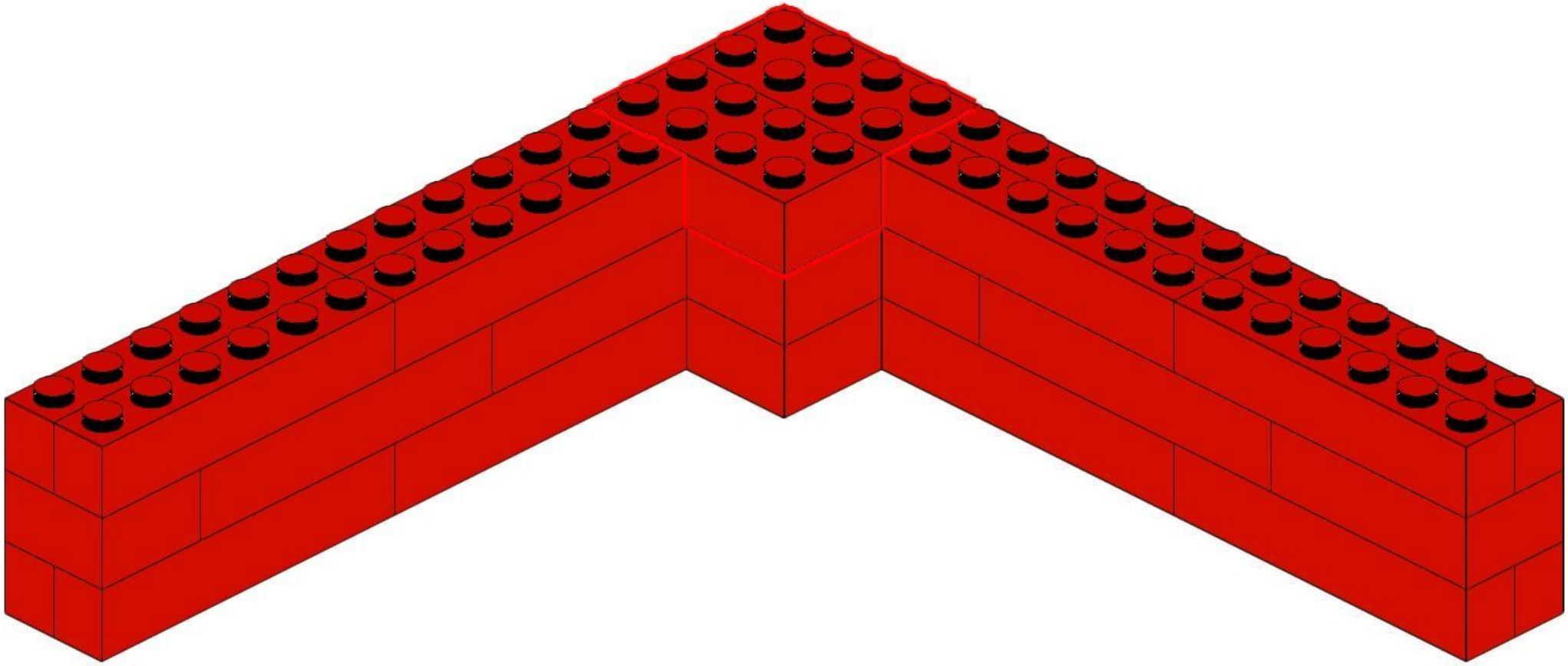

13

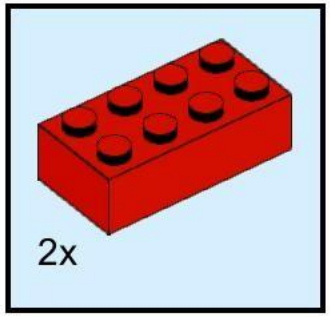

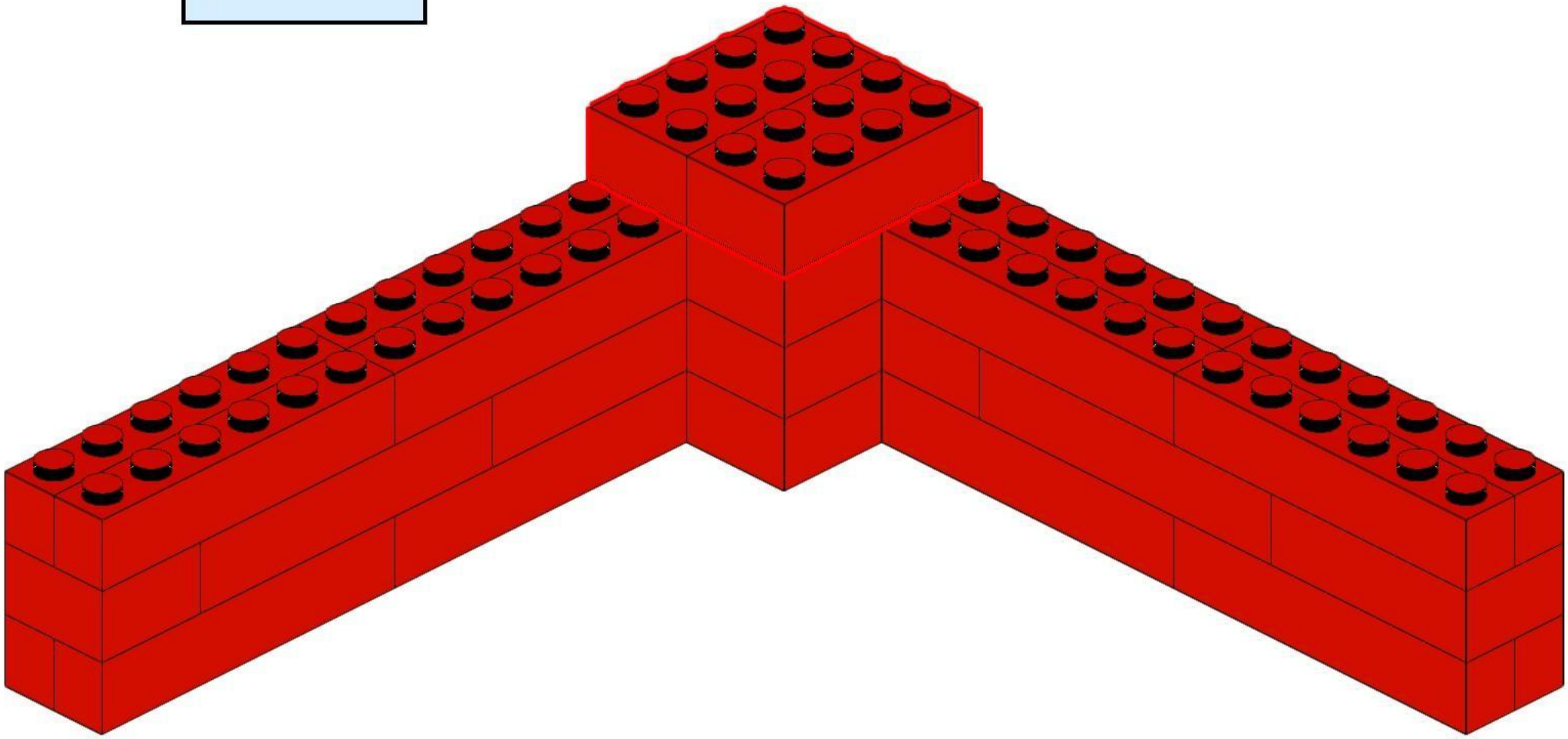

14

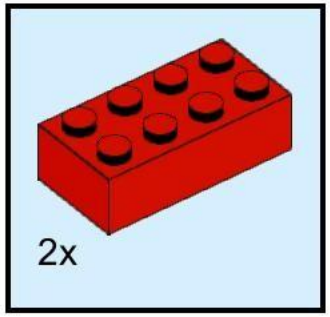

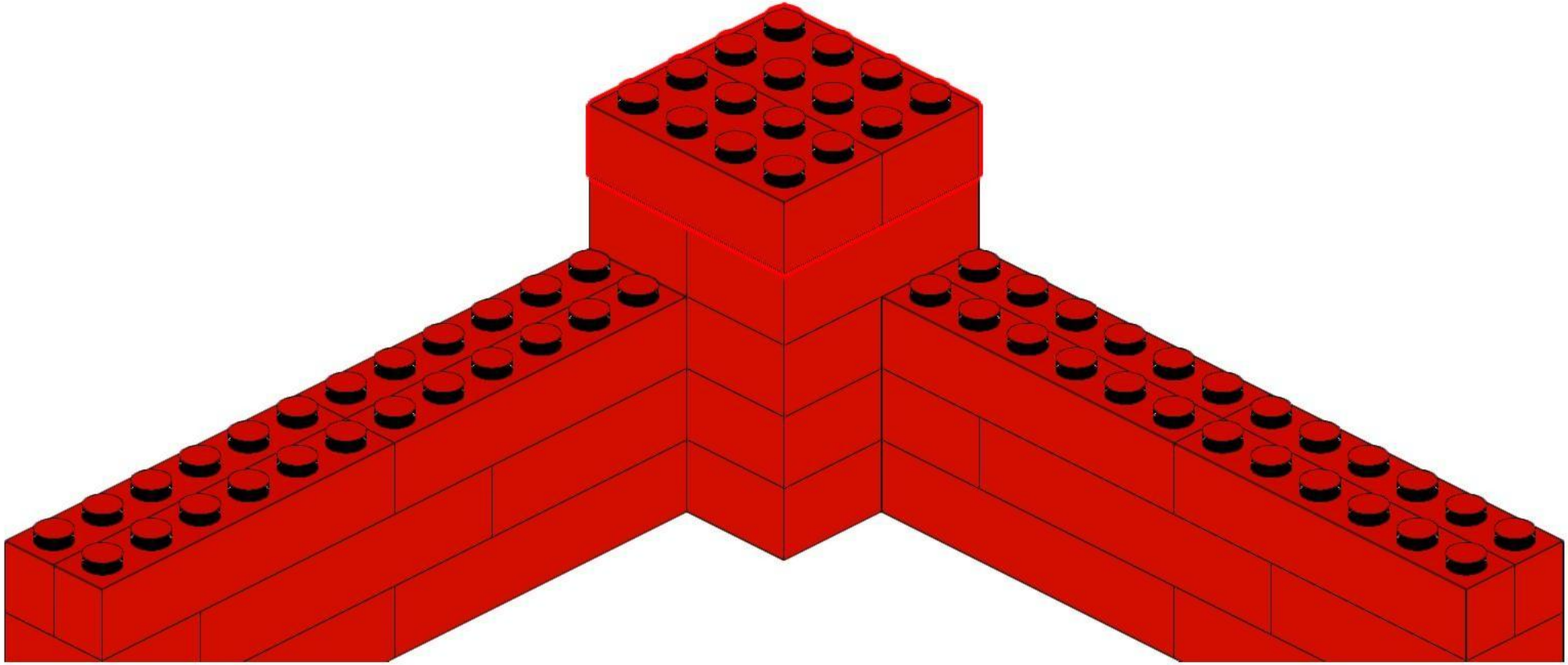

15

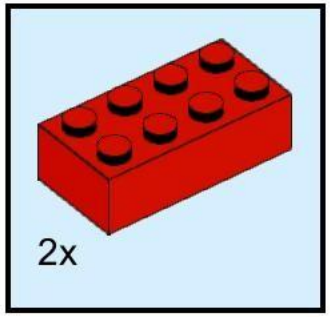

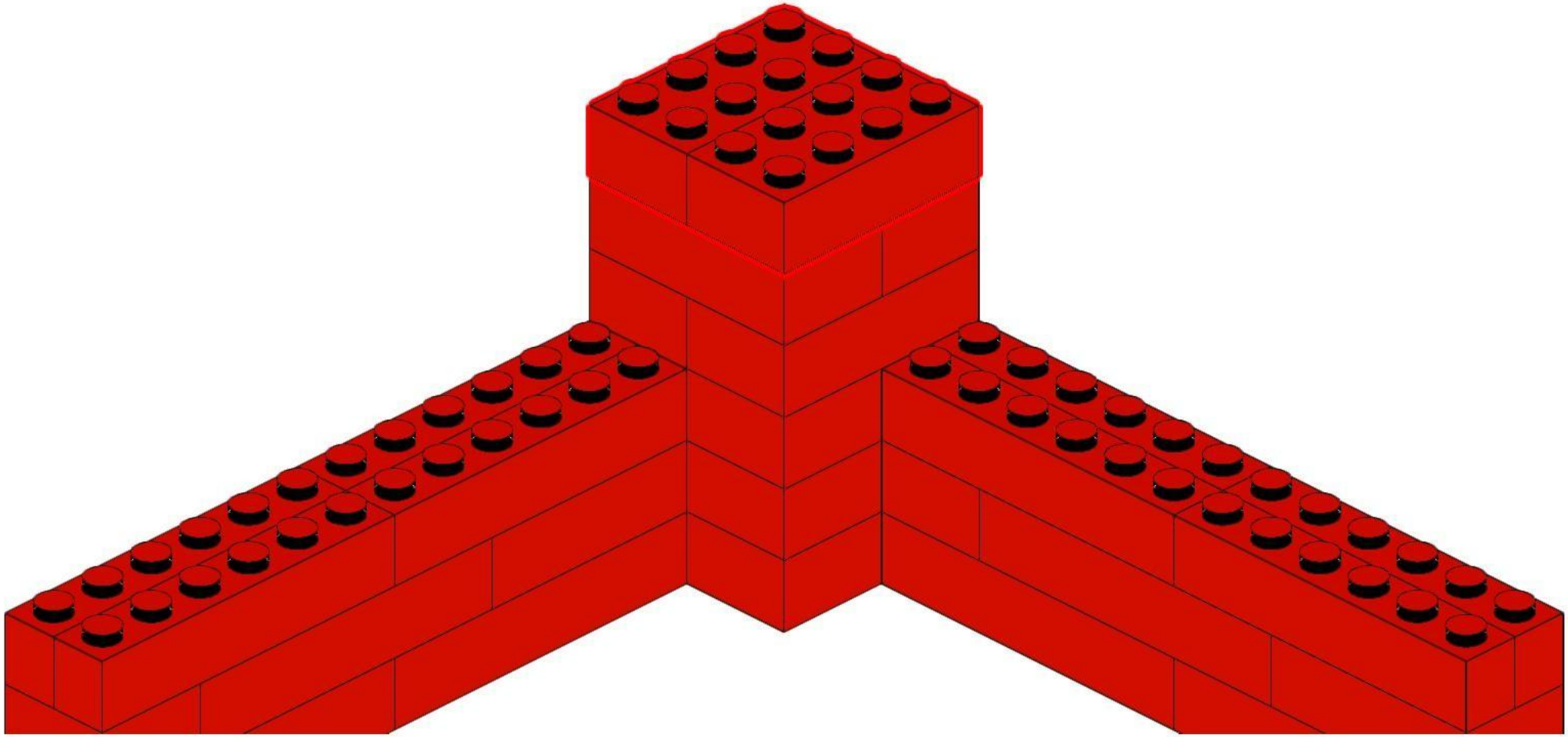

16

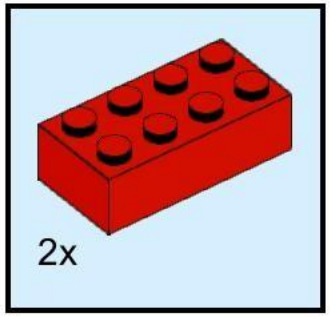

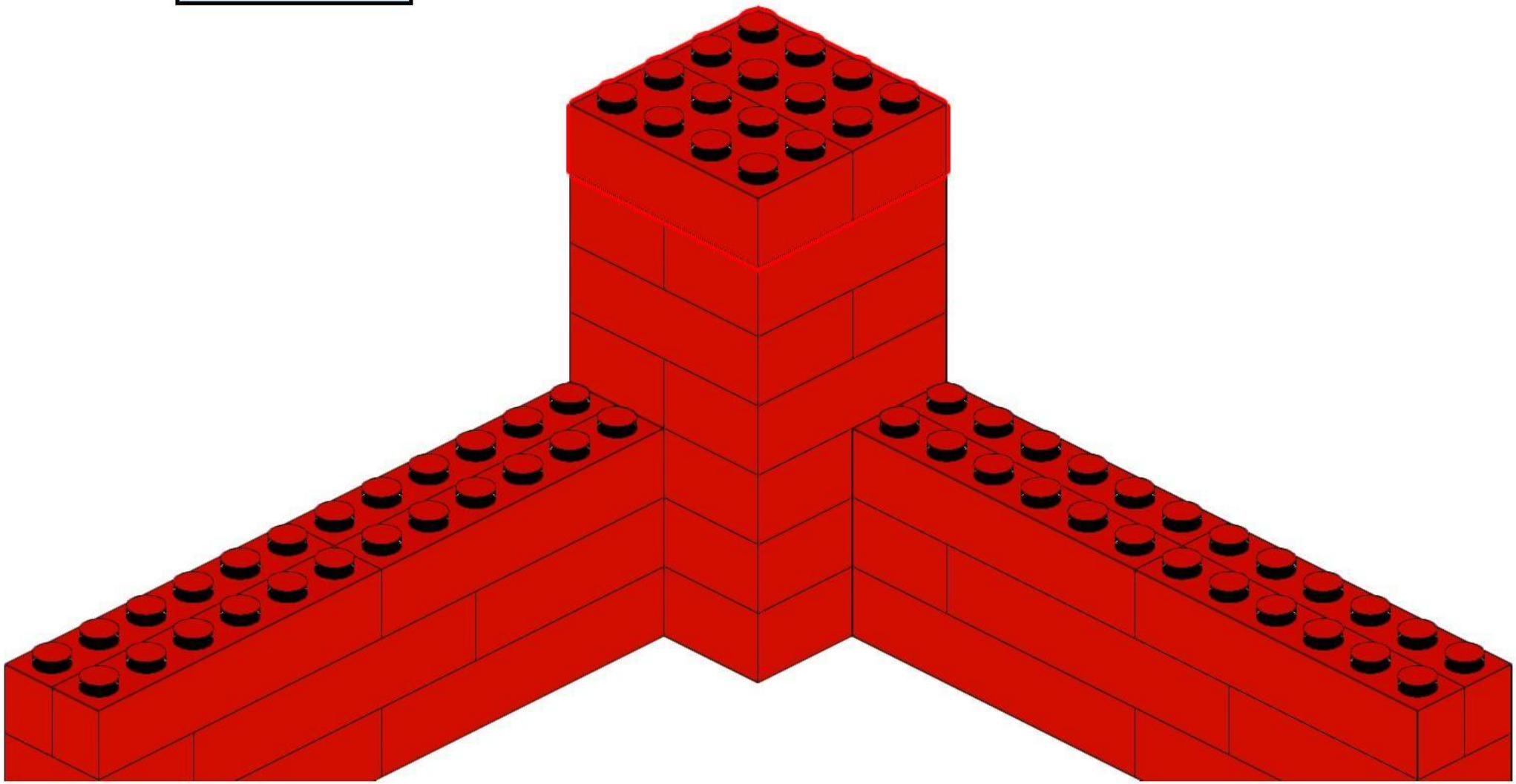

17

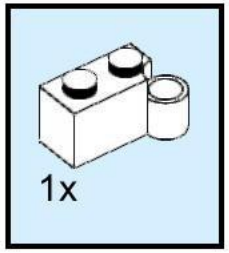

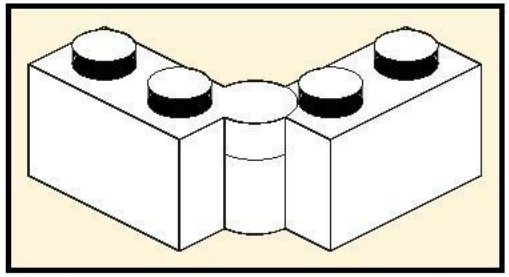

2x

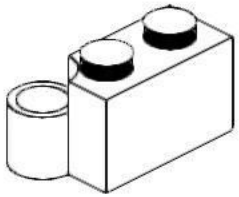

18

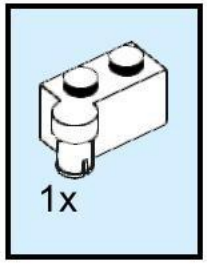

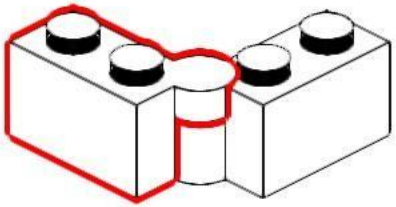

19

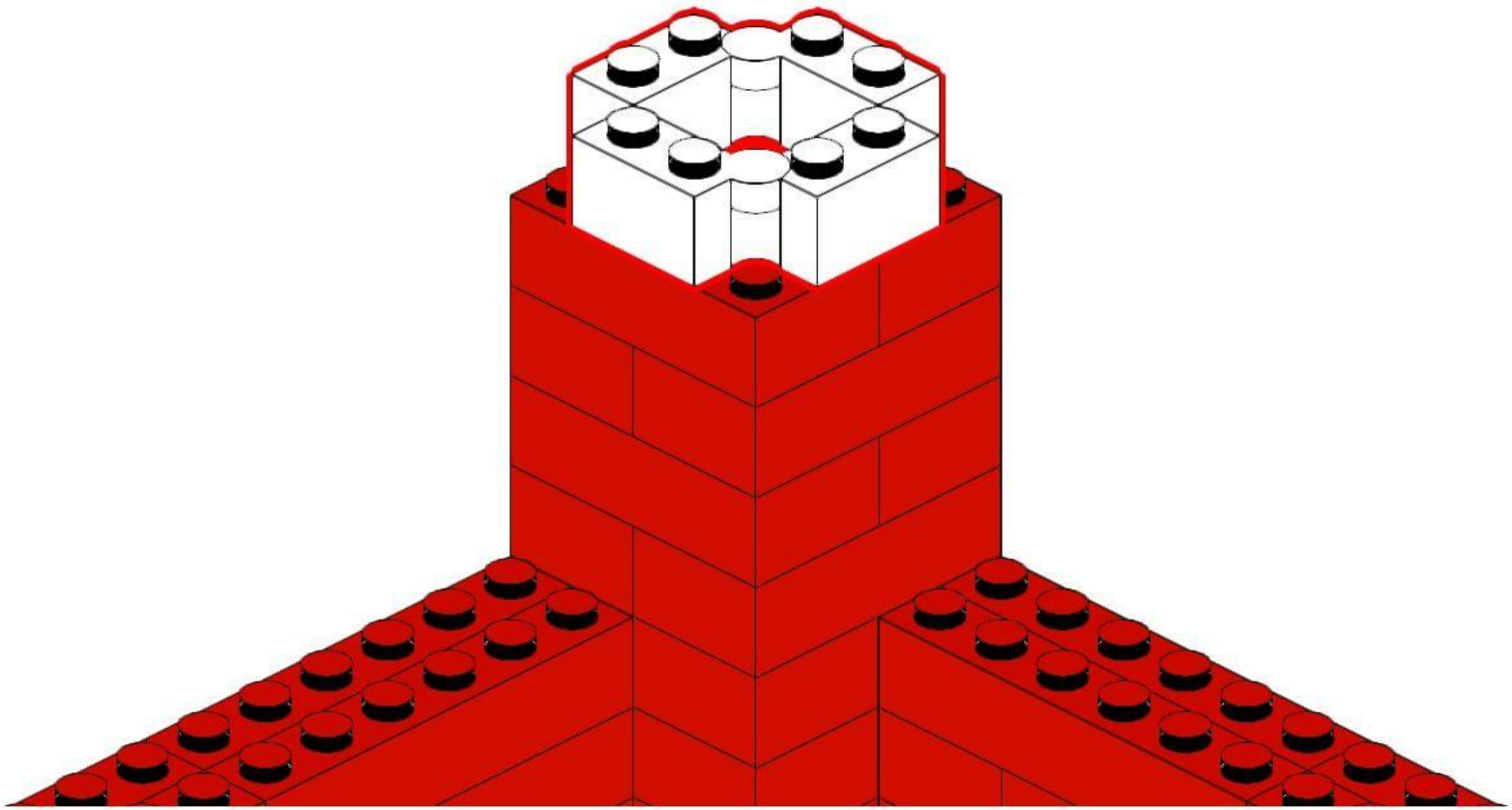

20

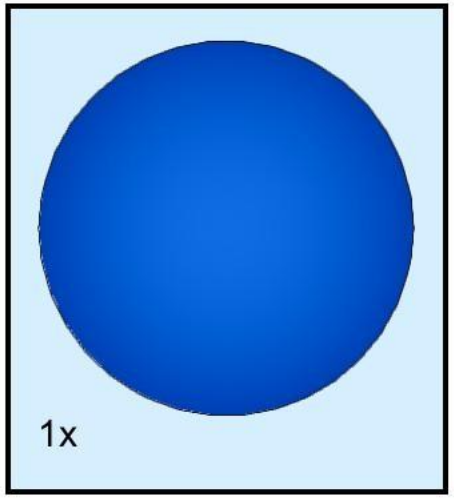

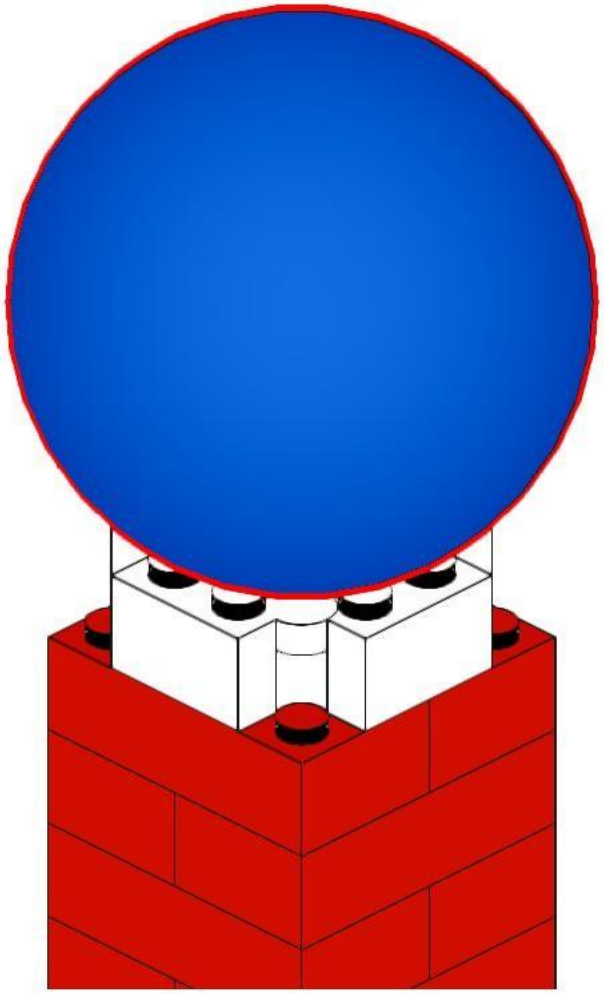

21

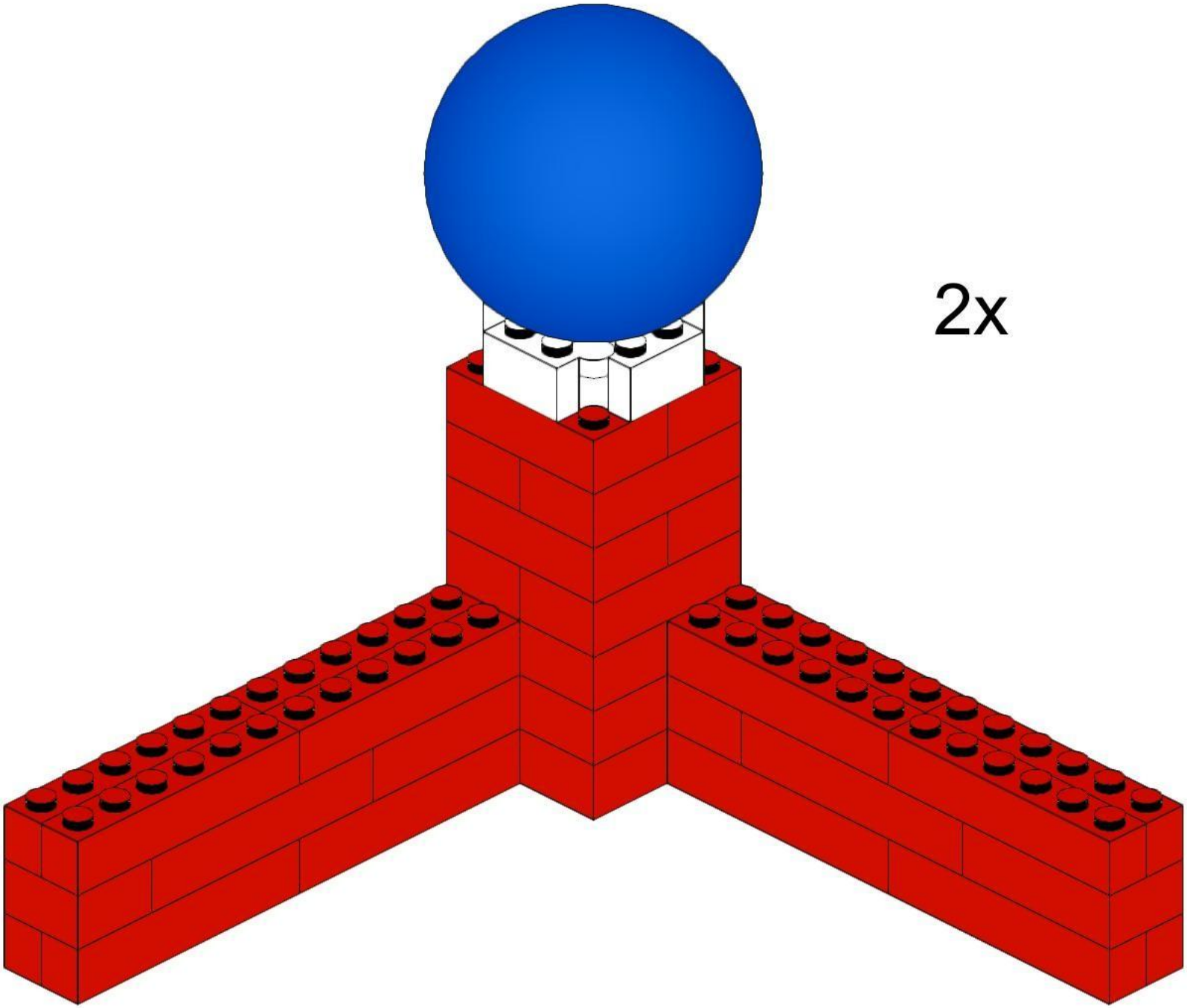

22

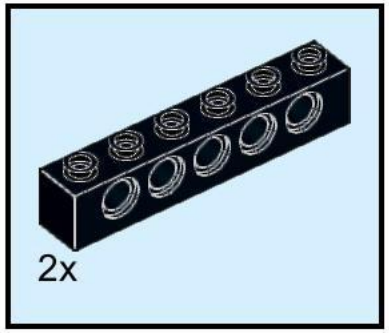

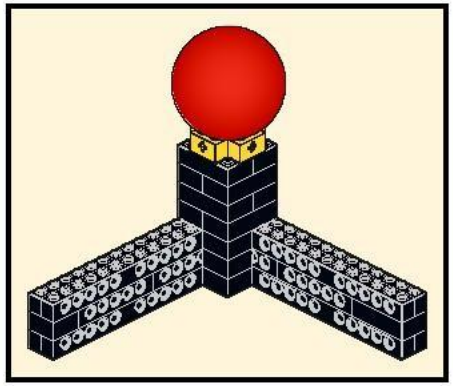

2x

23

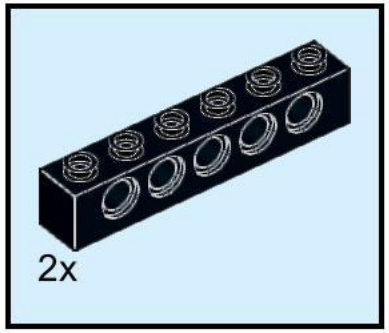

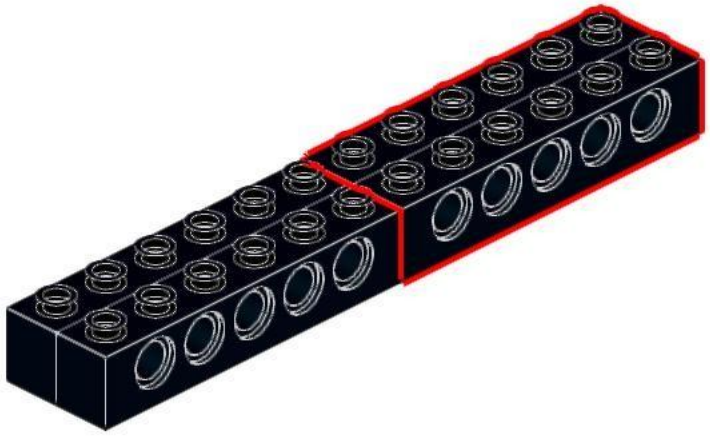

24

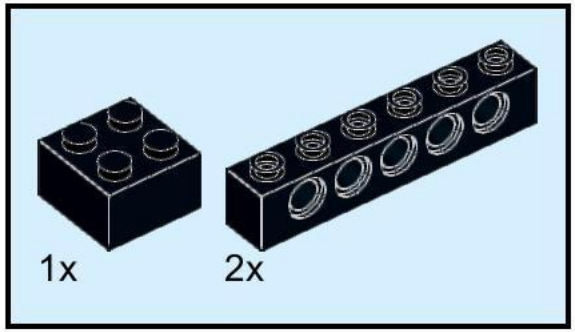

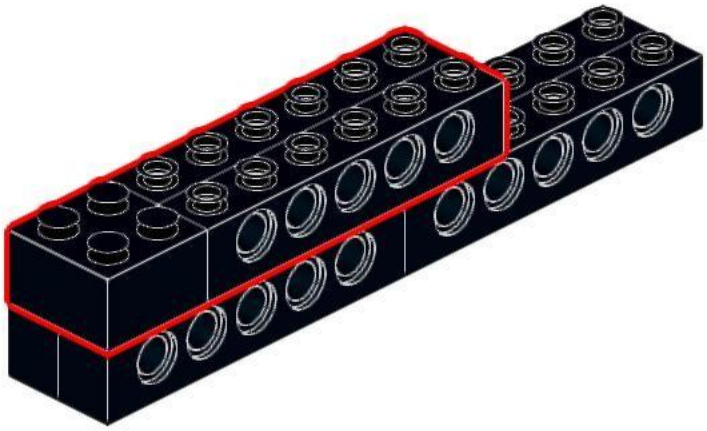

25

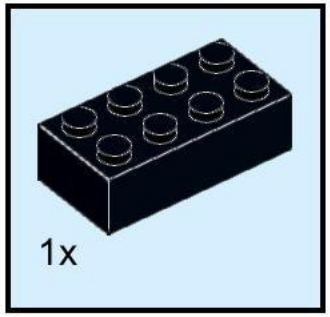

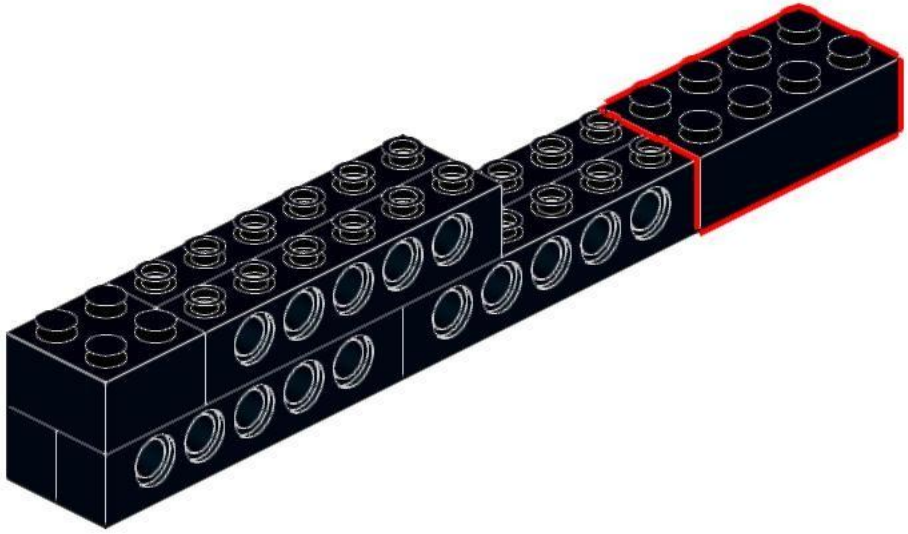

26

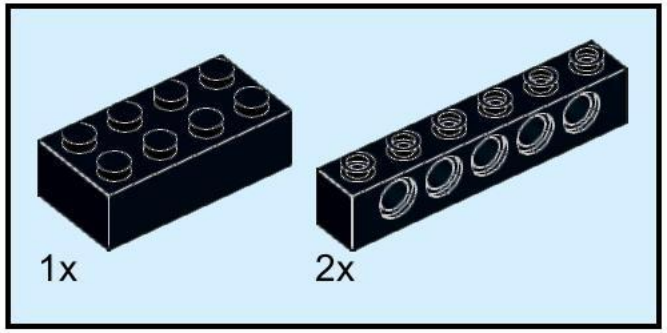

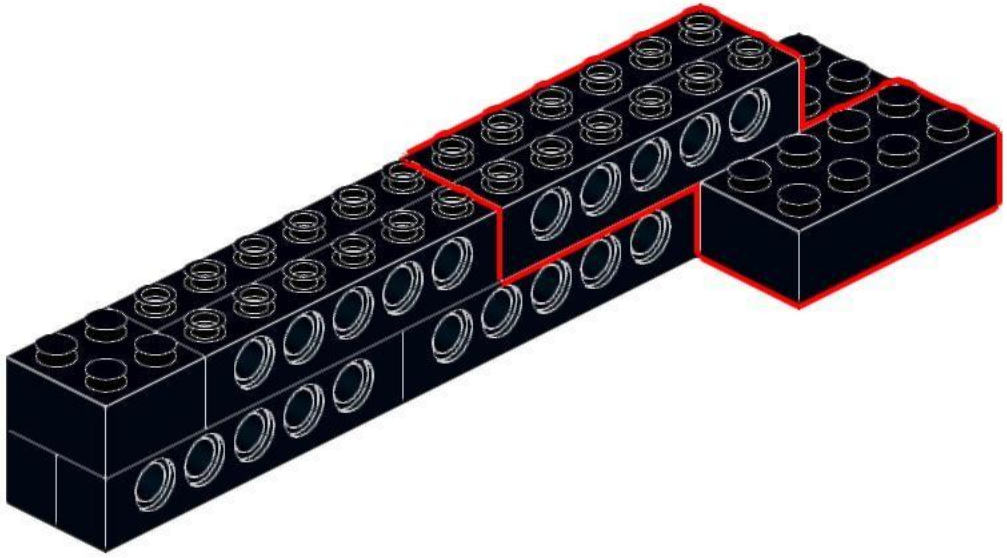

27

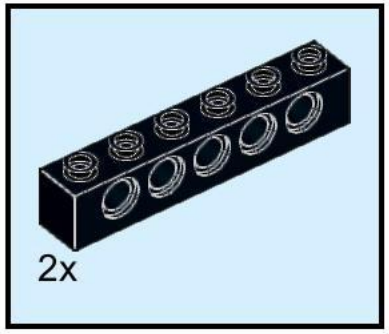

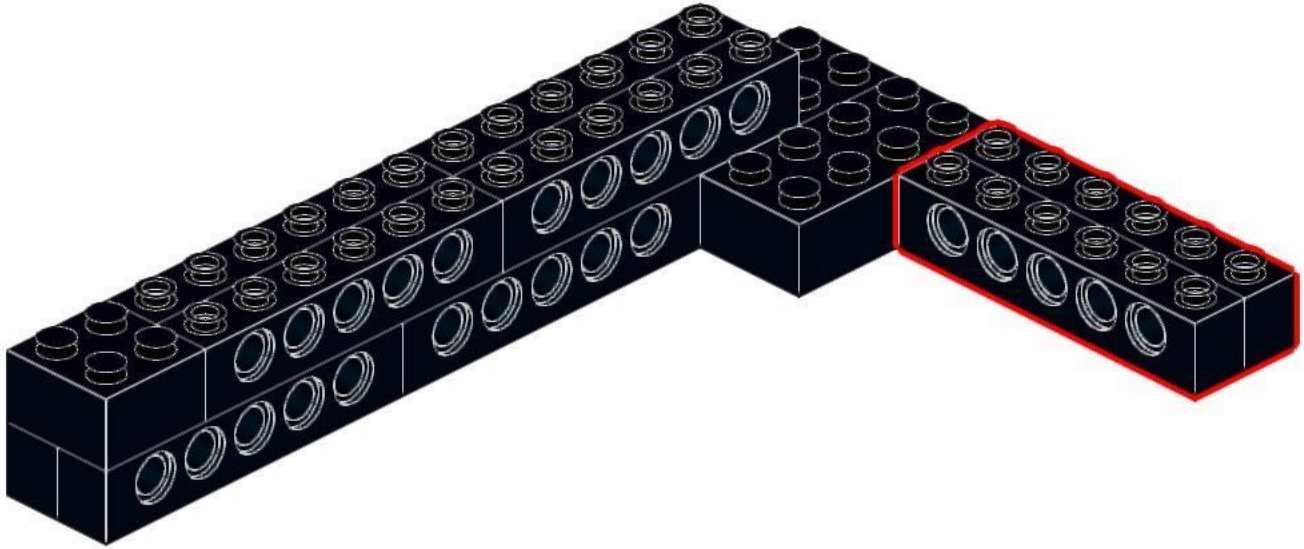

28

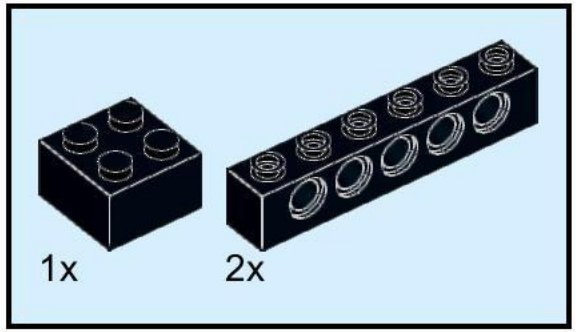

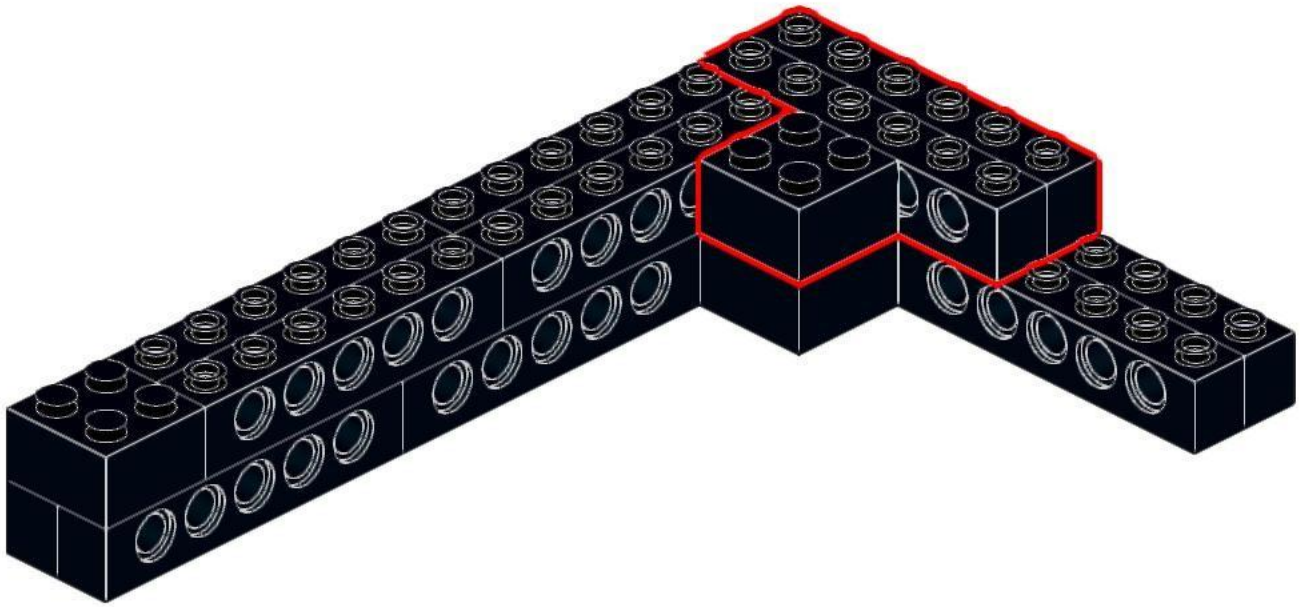

29

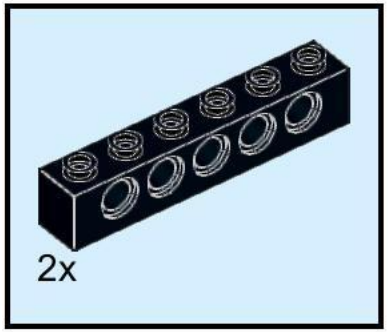

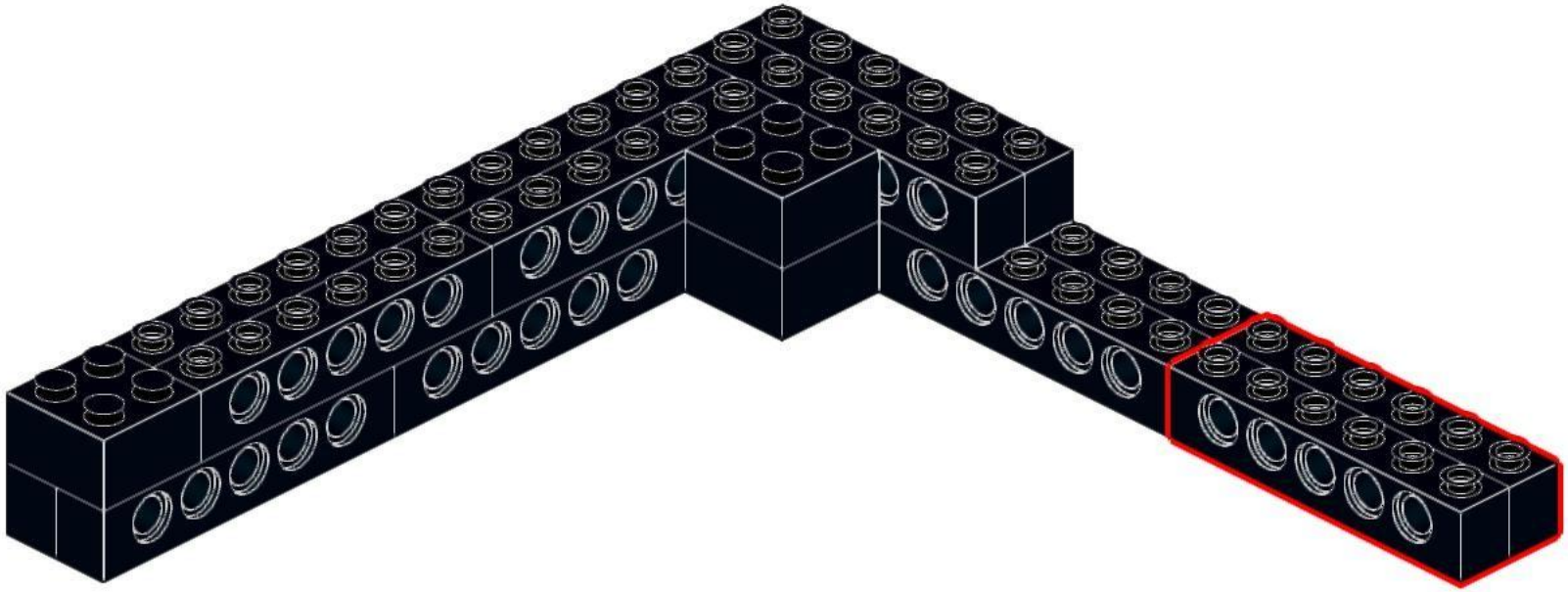

30

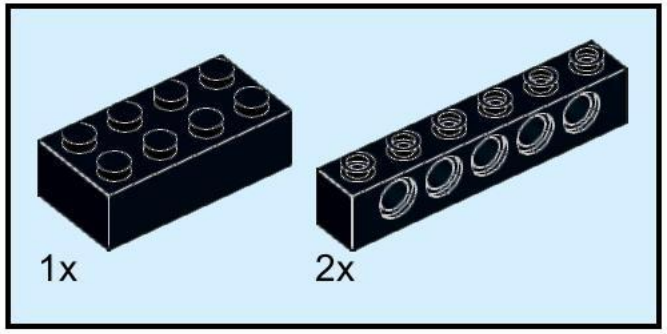

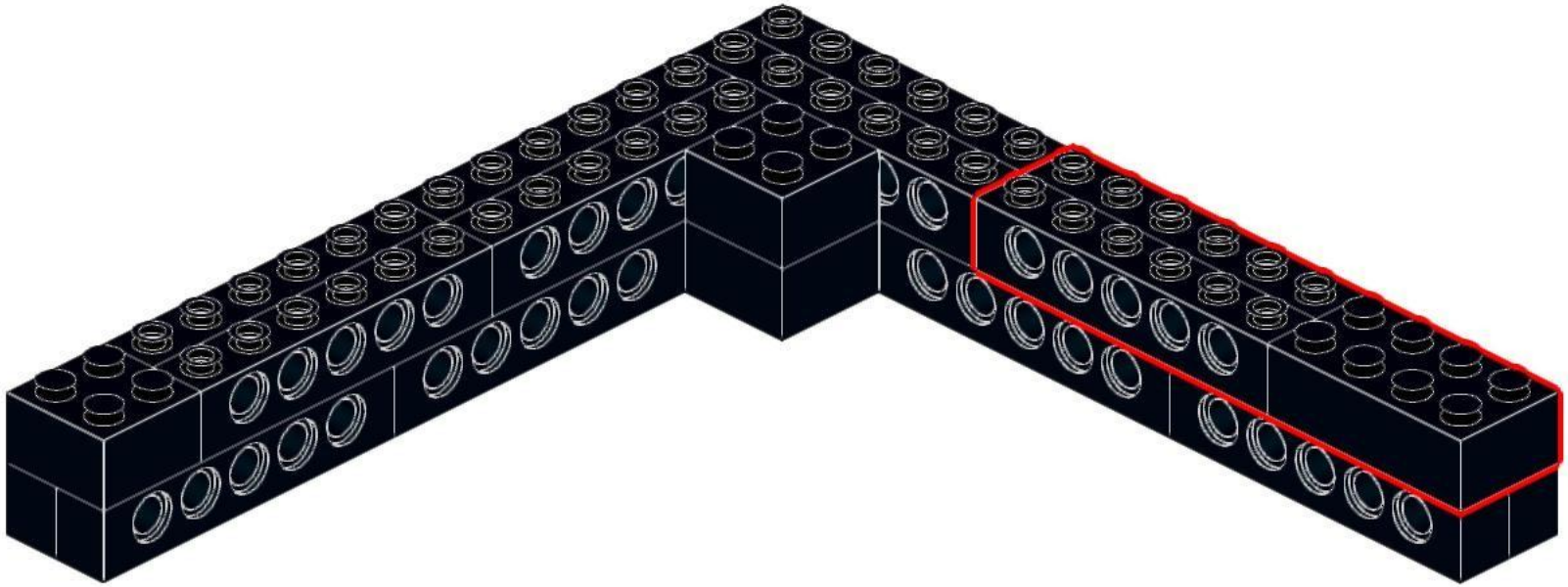

31

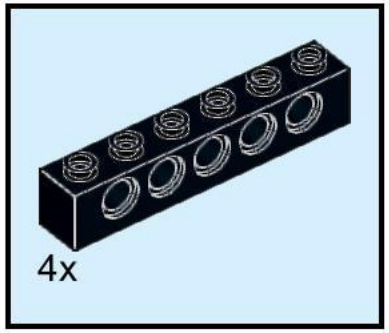

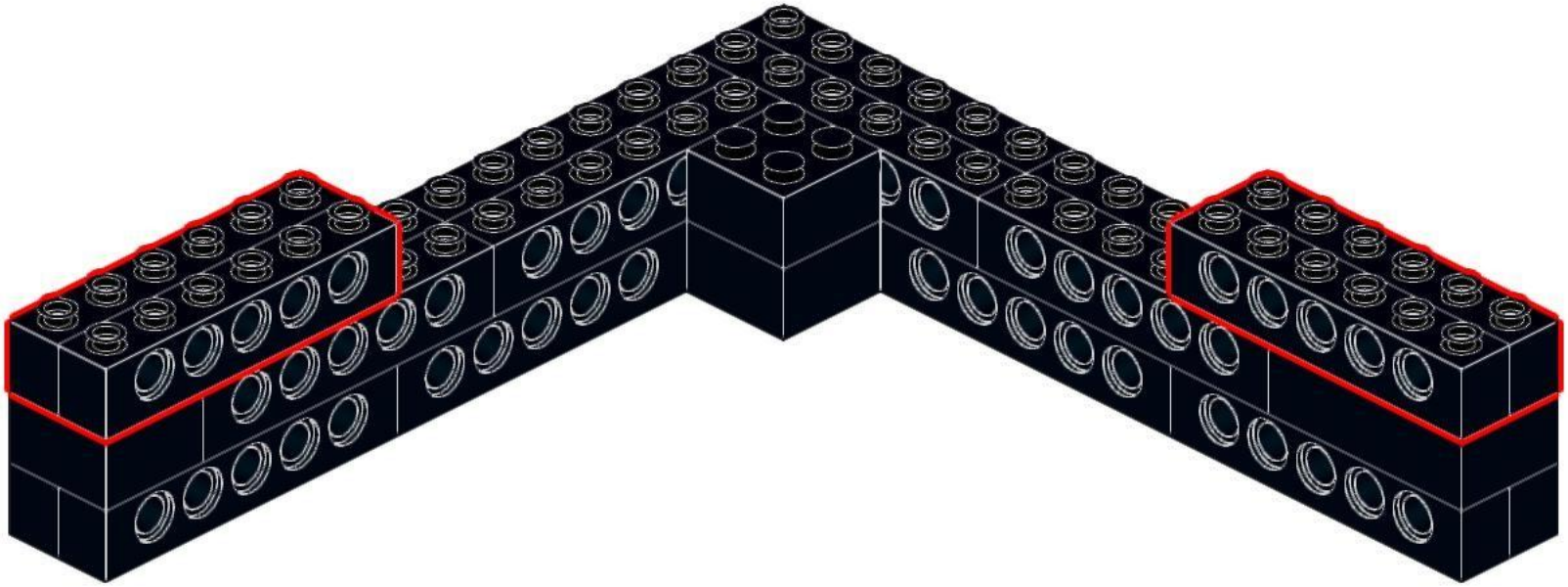

32

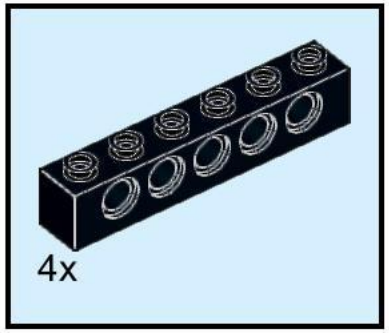

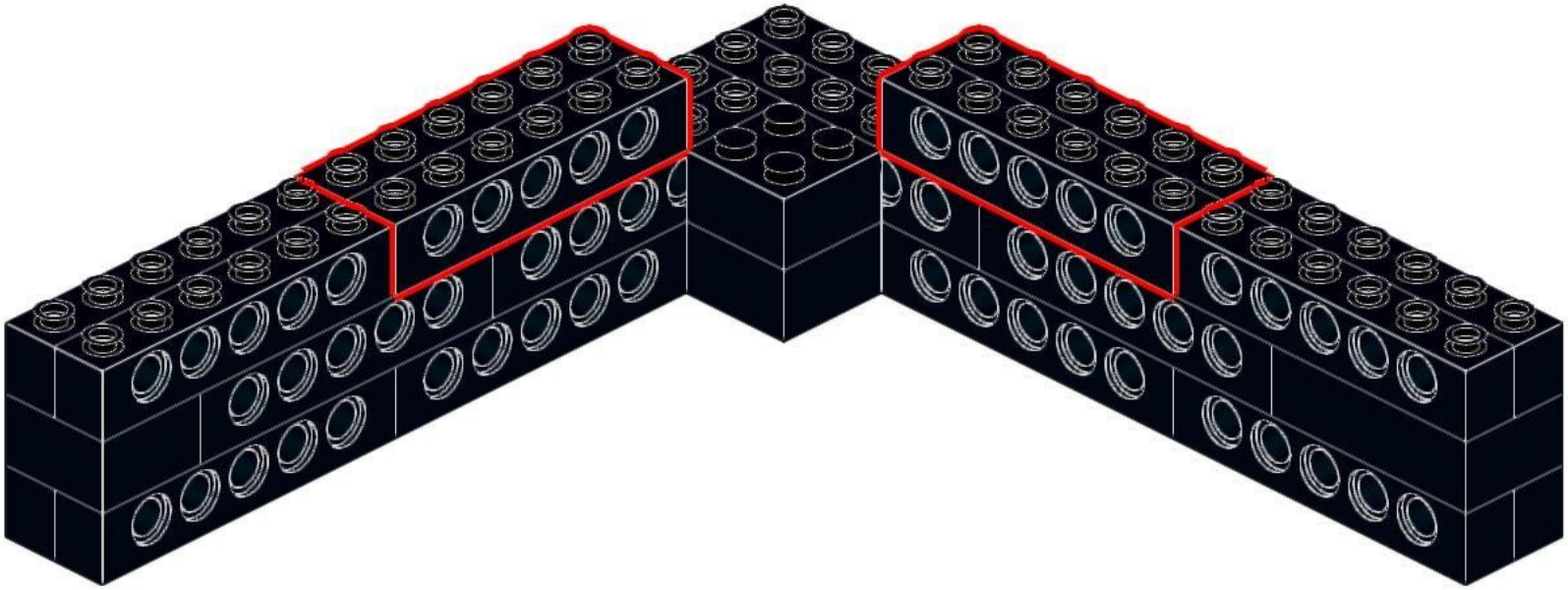

33

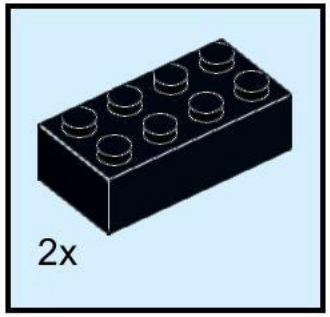

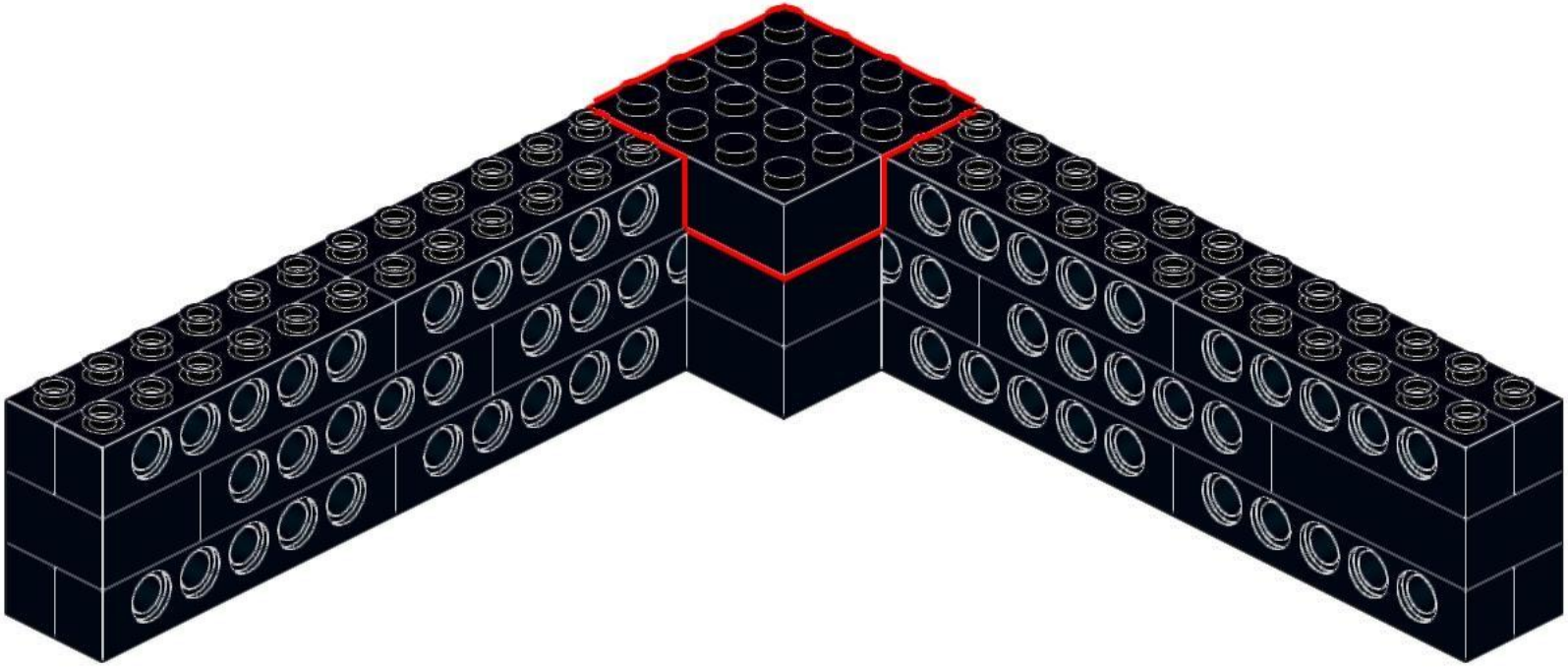

34

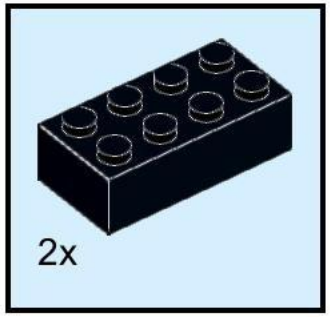

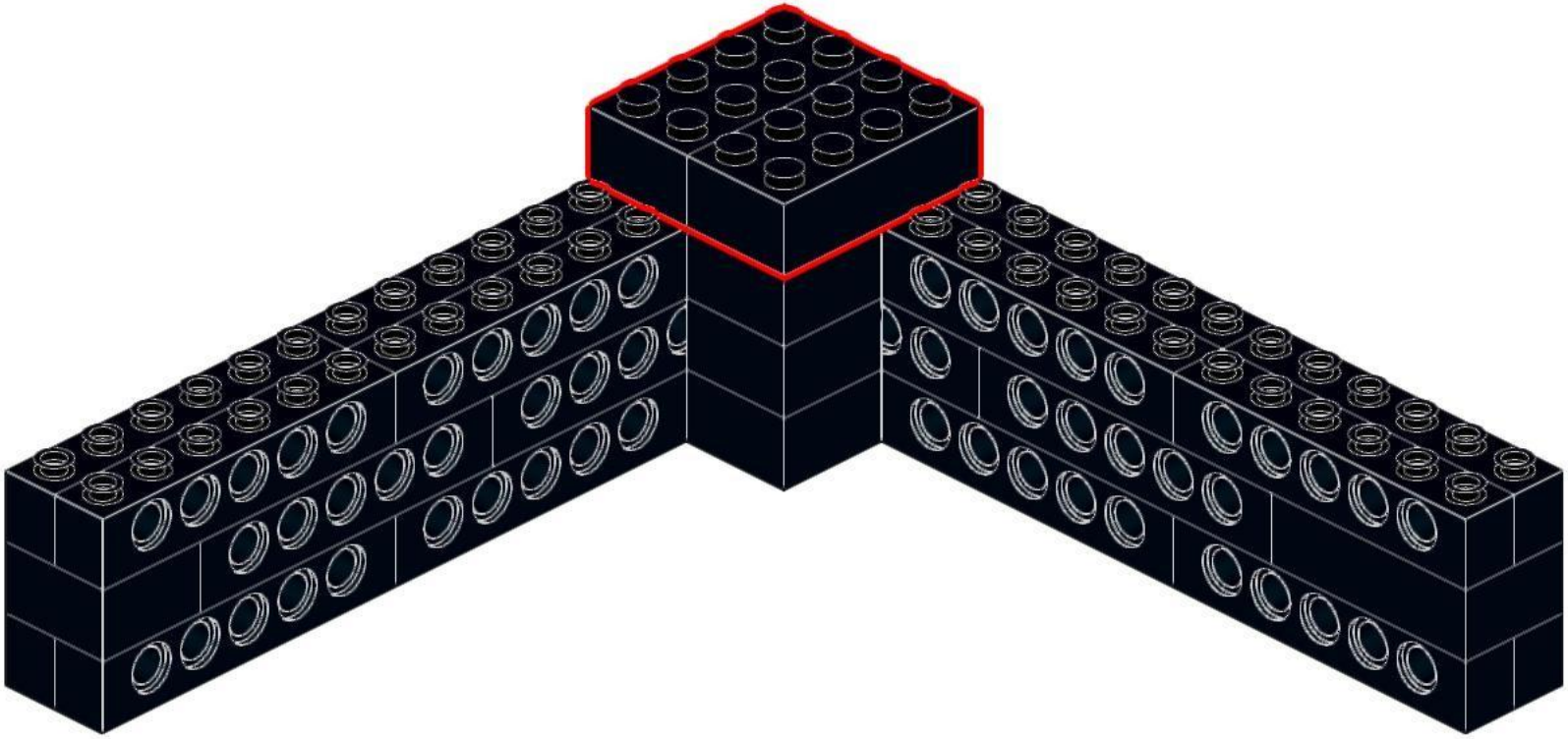

35

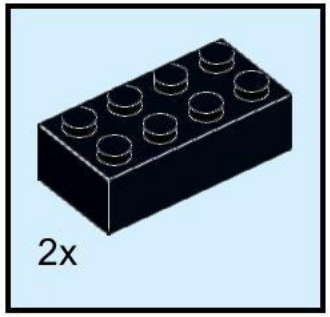

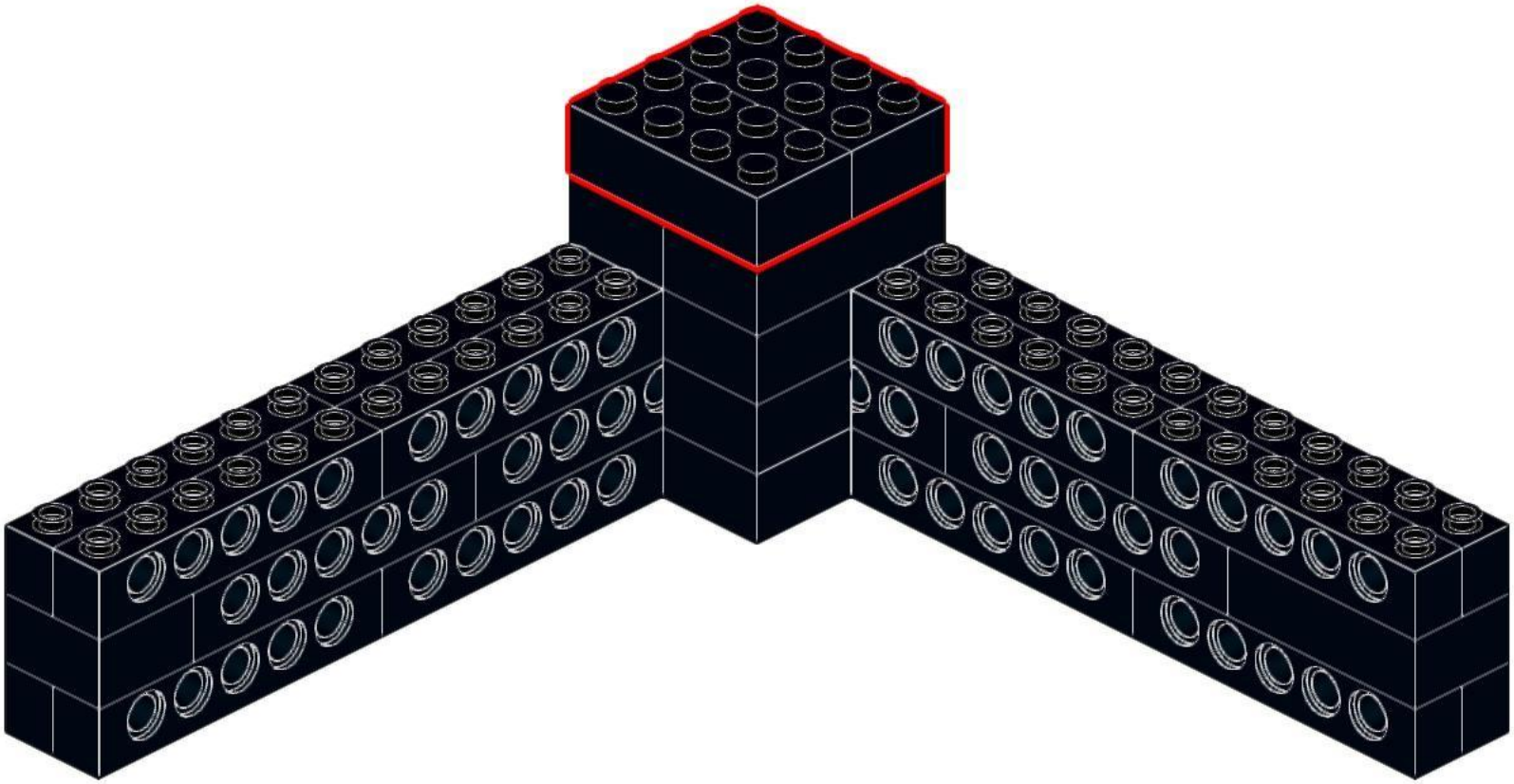

36

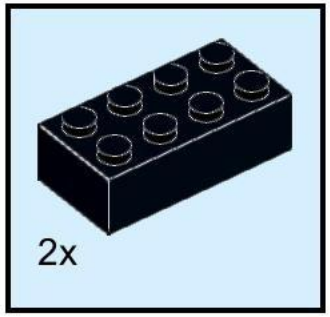

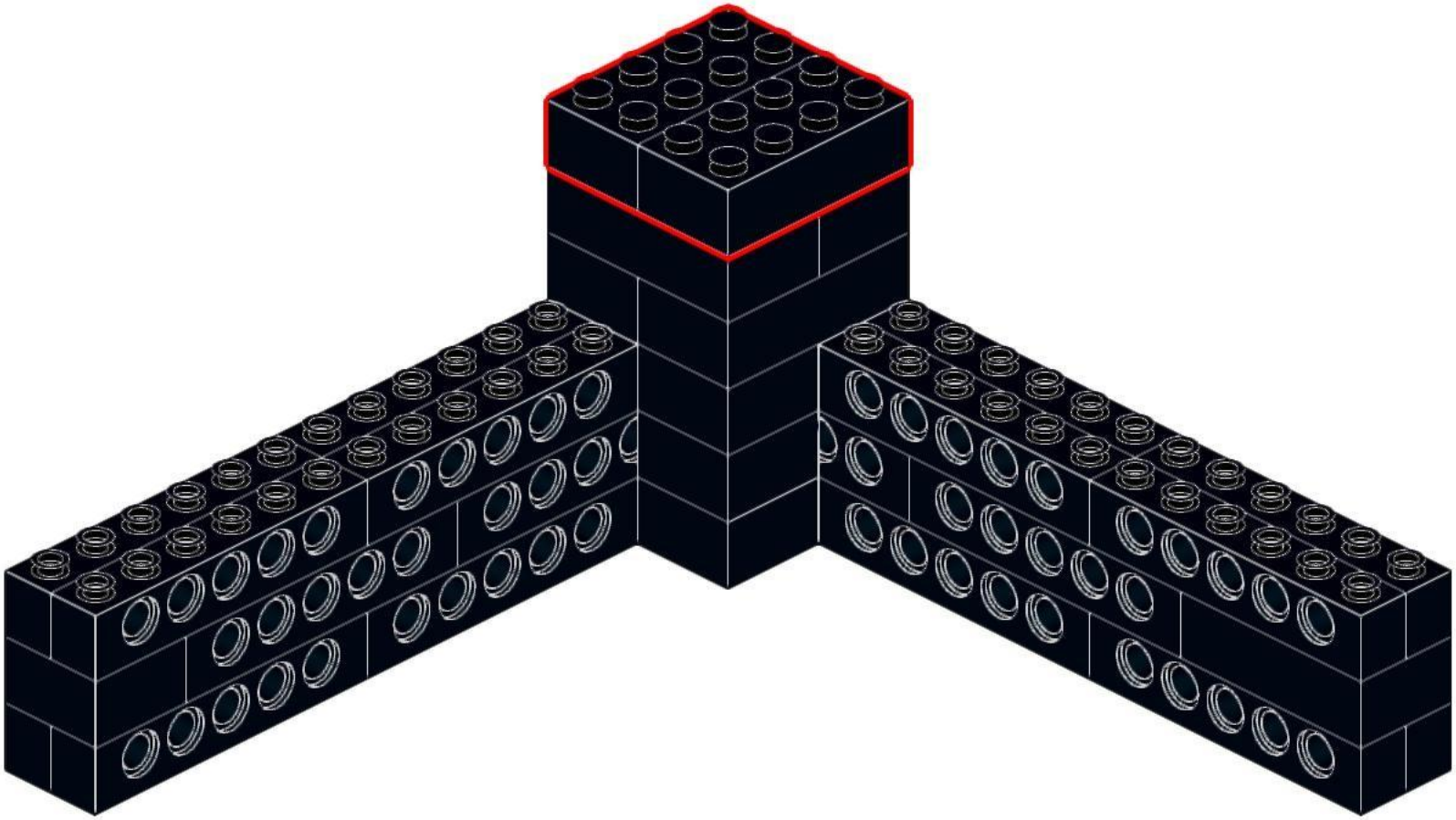

37

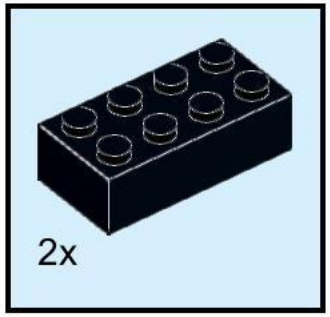

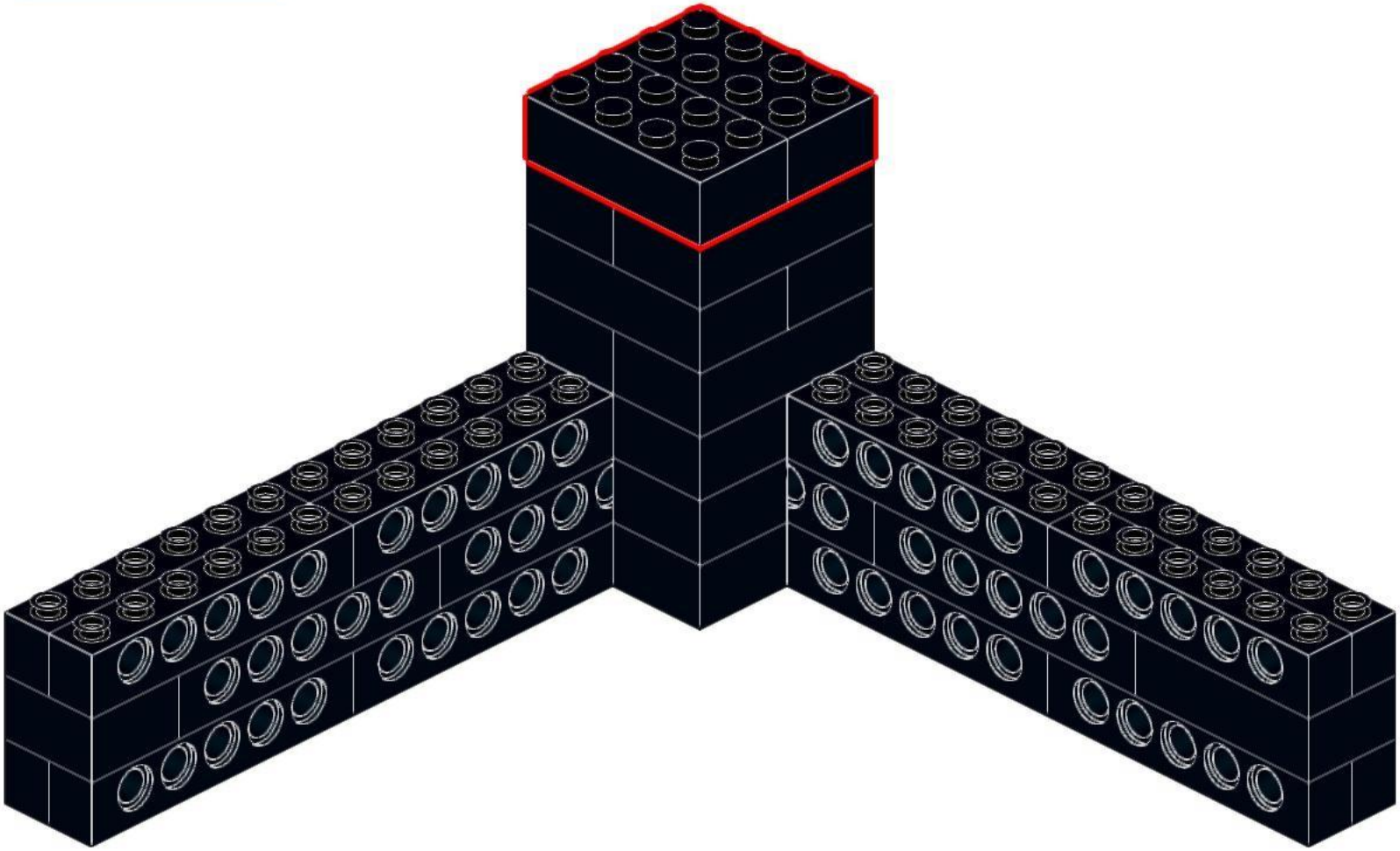

38

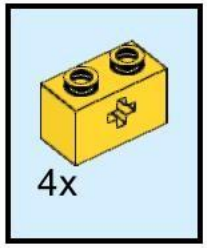

Important: In case you have the new brick set (KKITC Creative Element Set) please use the normal 1x2 yellow bricks (without cross hole) instead.

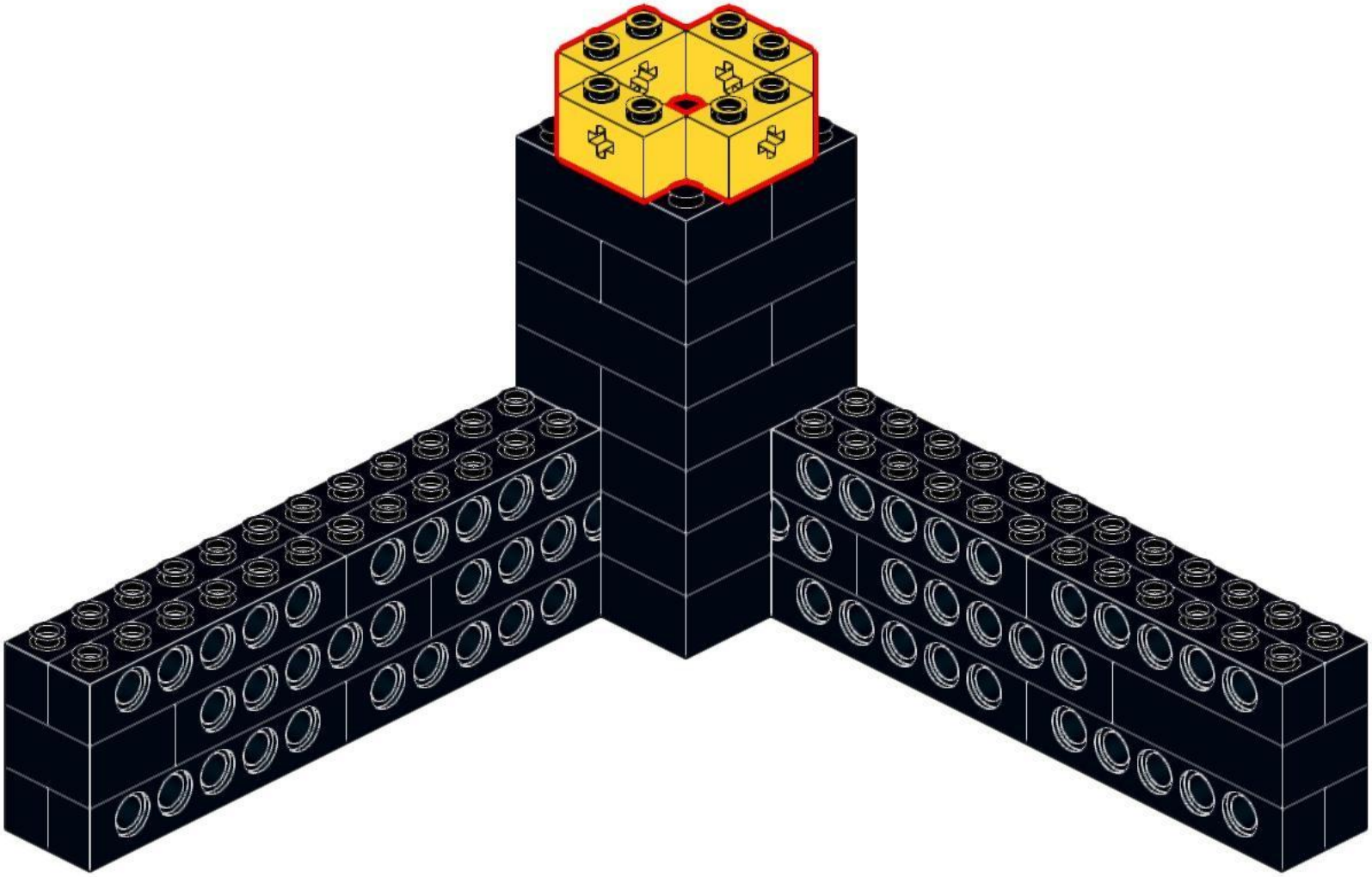

39

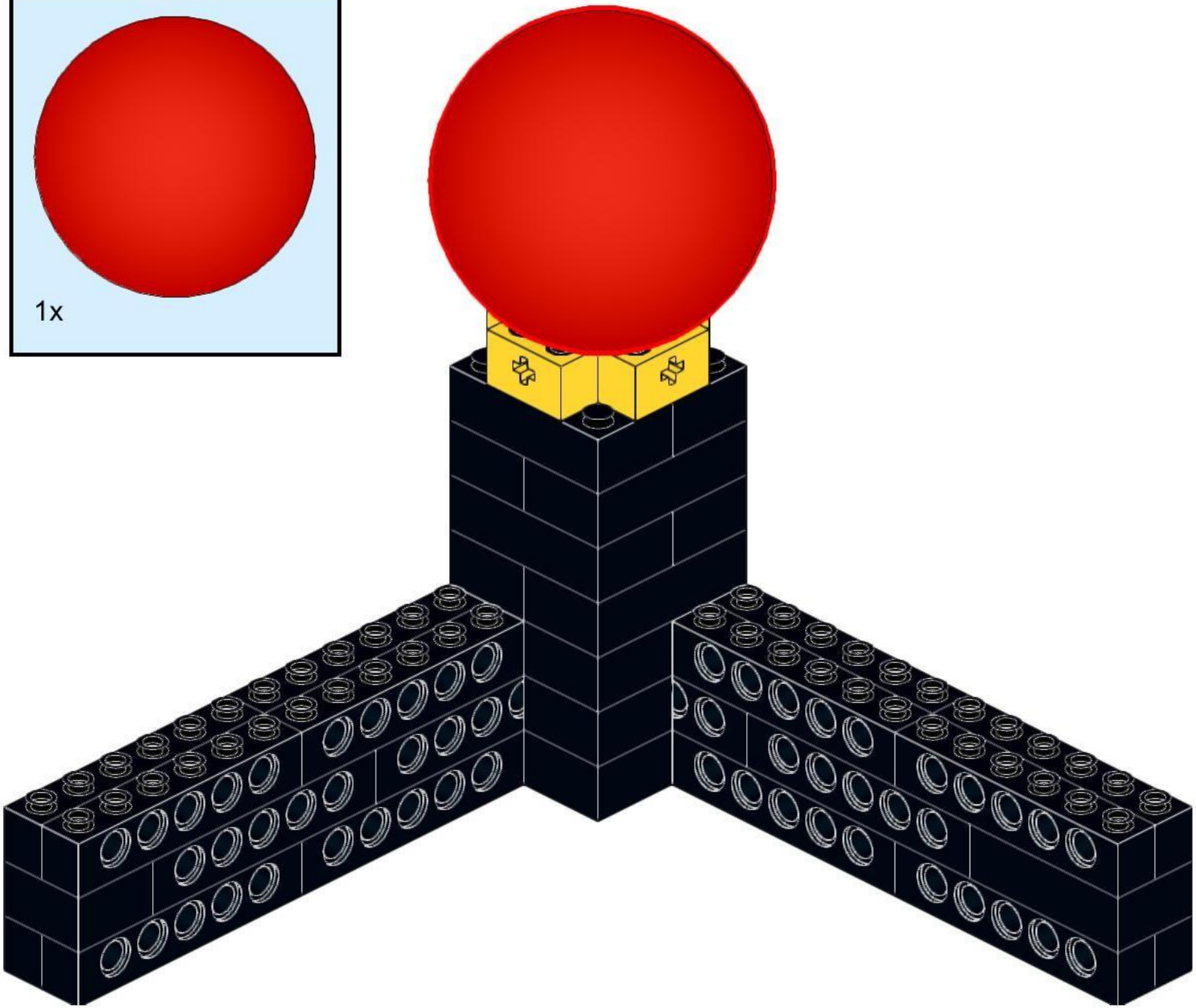

40

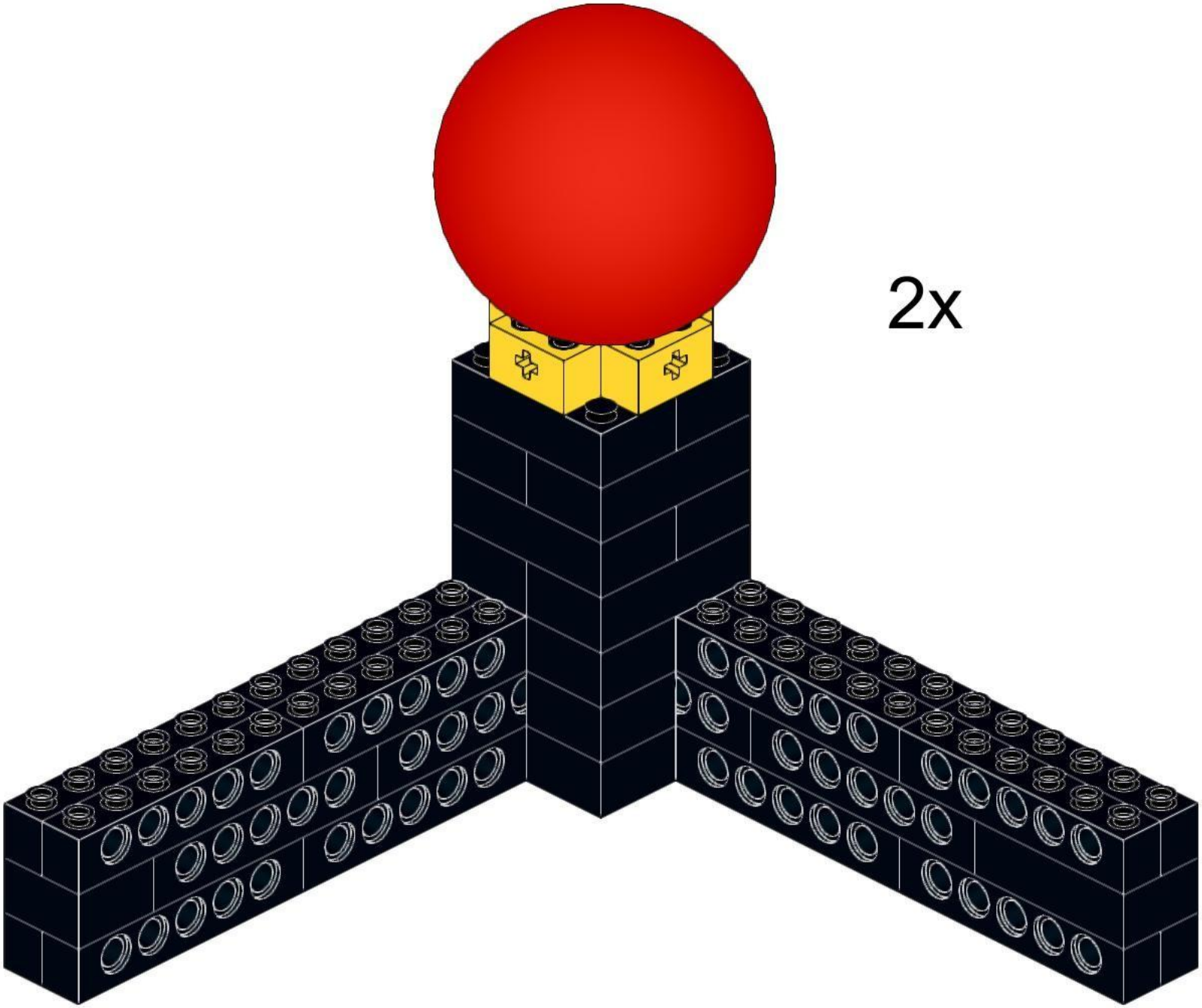

41

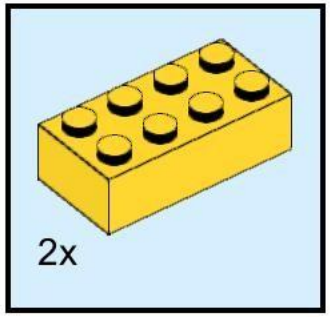

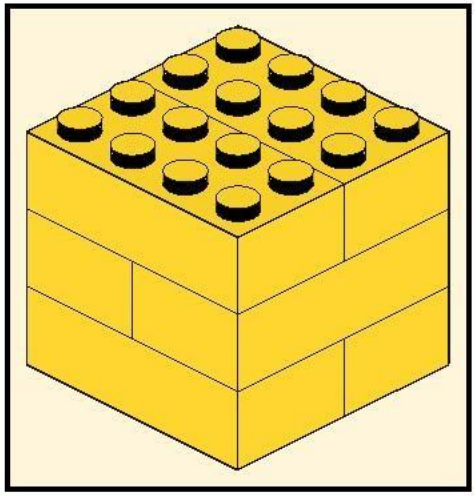

6x

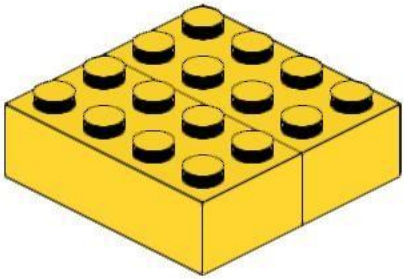

42

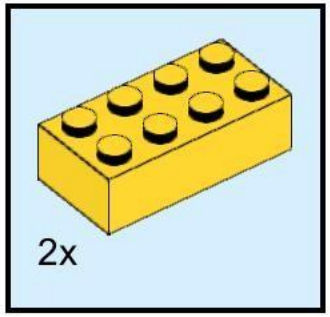

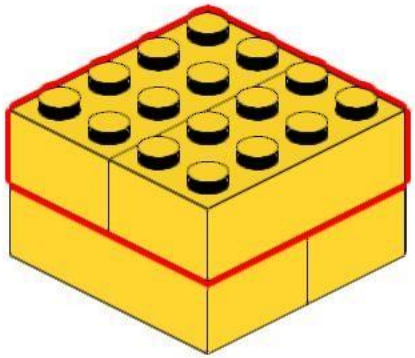

43

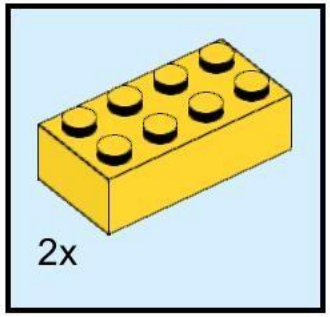

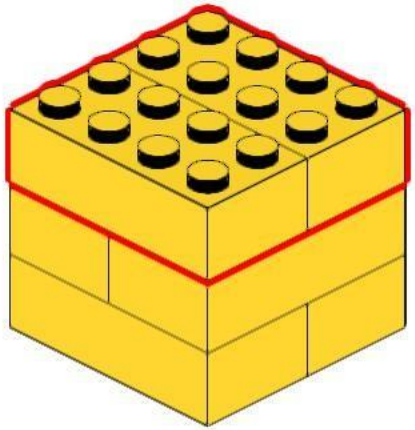

44

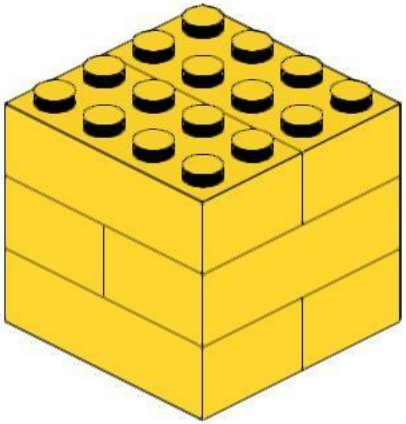

6x

45

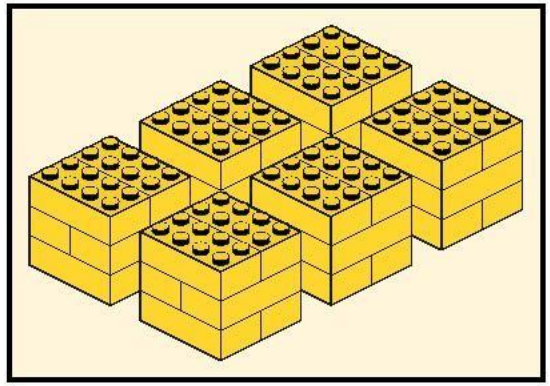

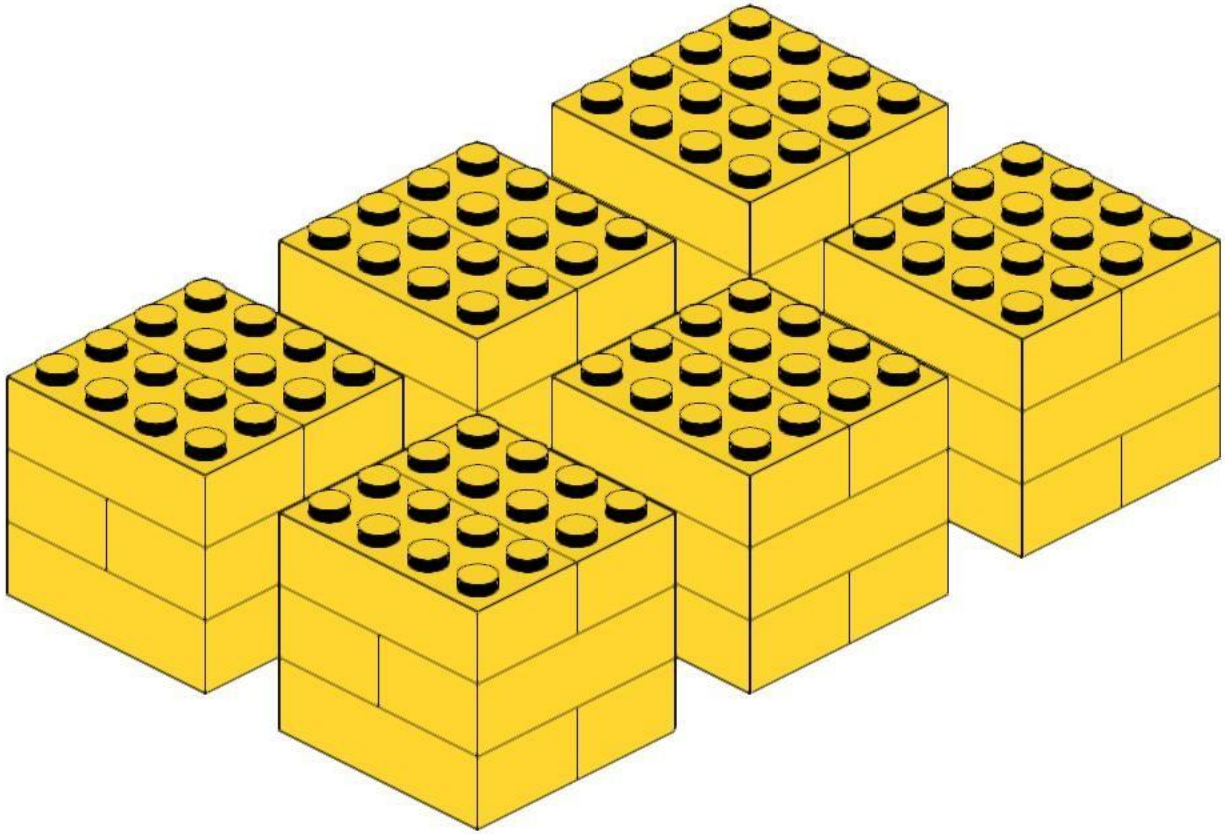

46

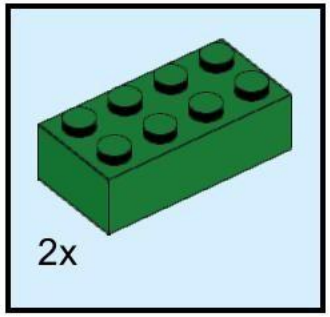

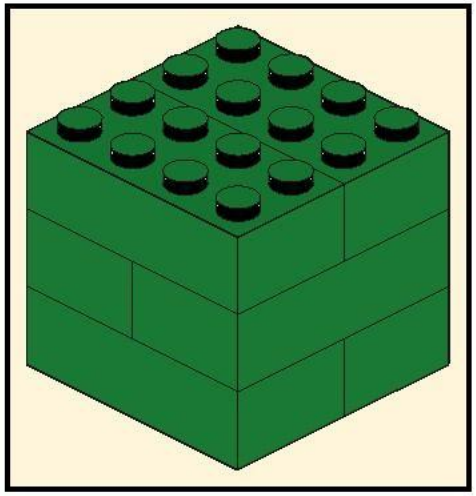

6x

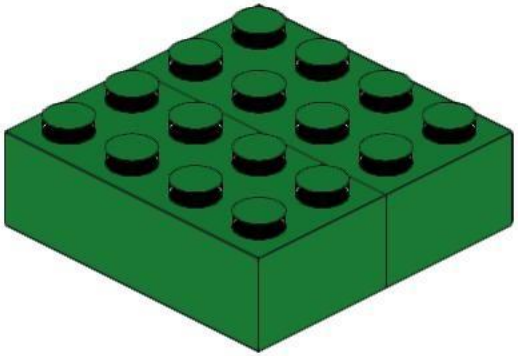

47

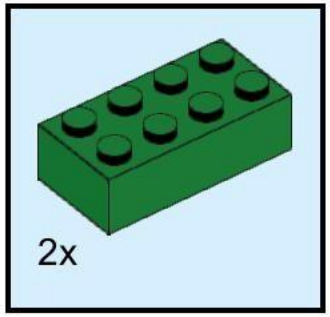

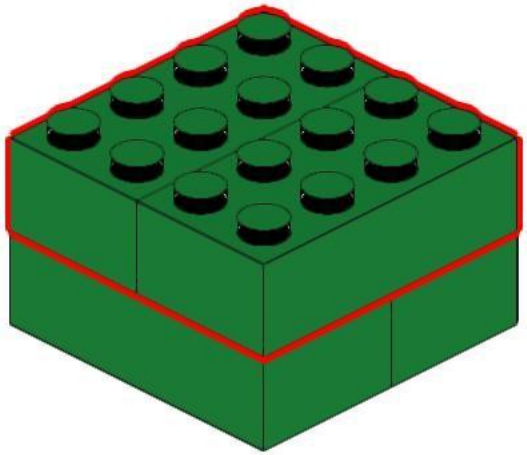

48

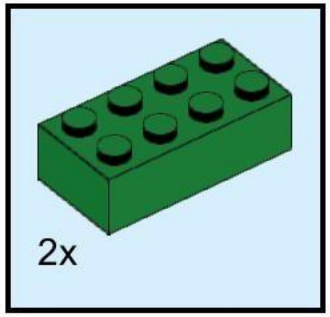

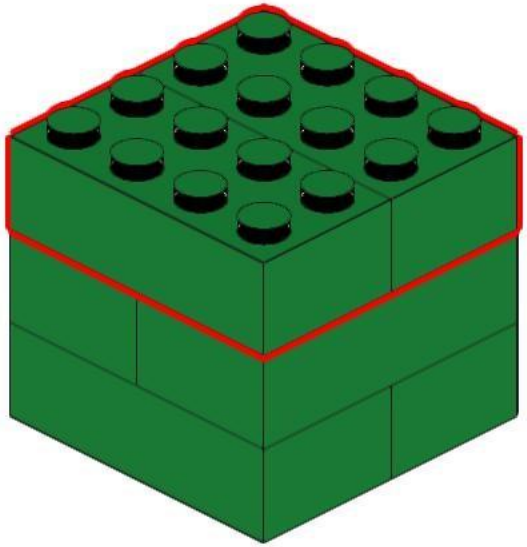

49

6x

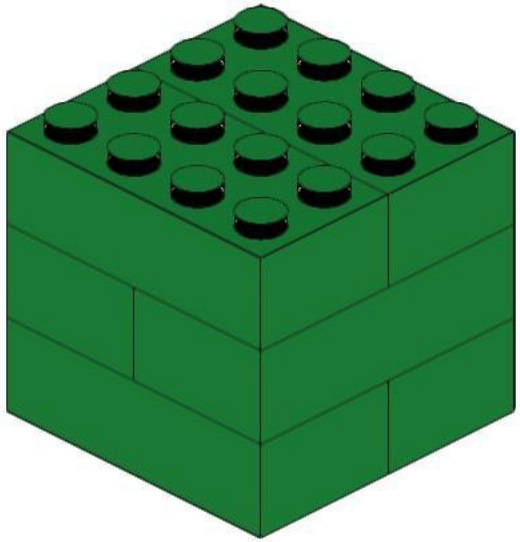

50

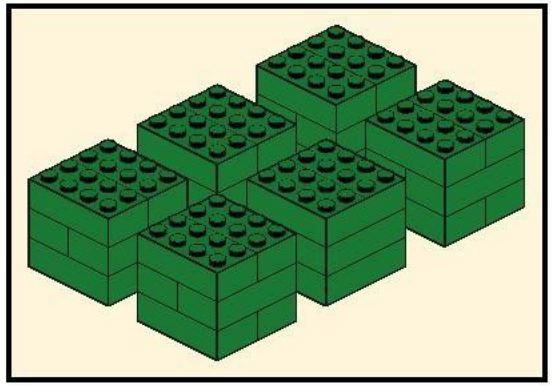

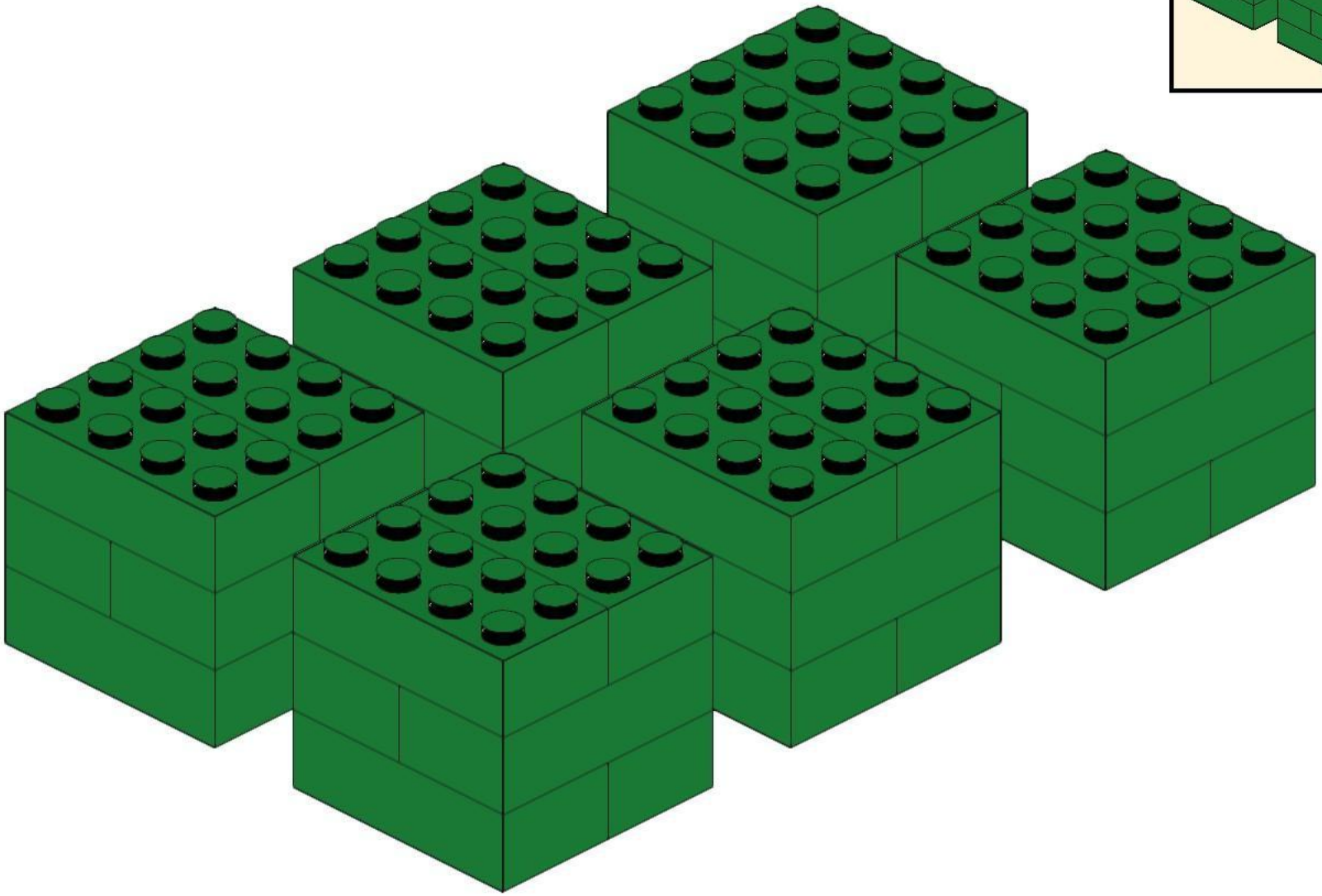

51

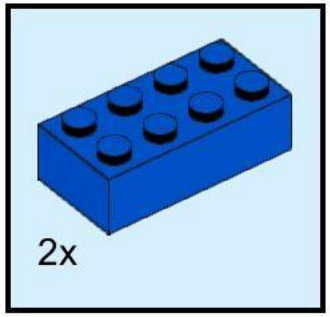

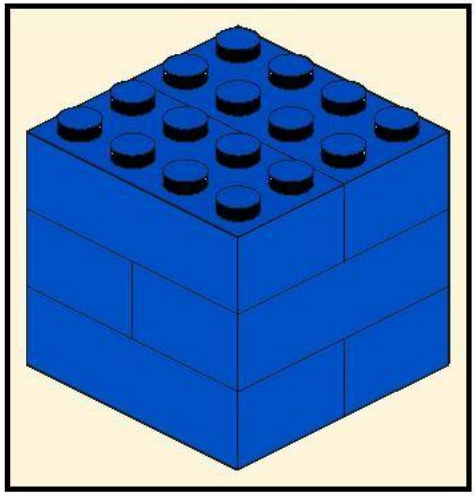

6x

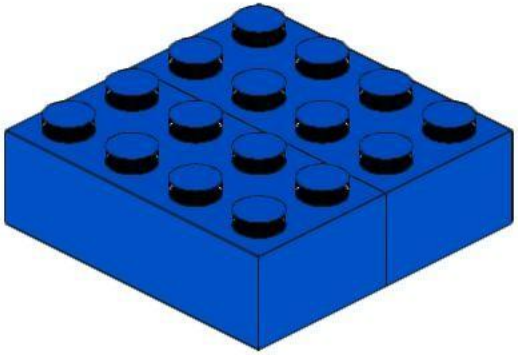

52

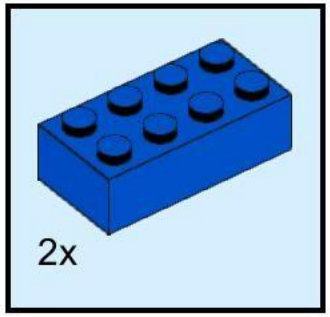

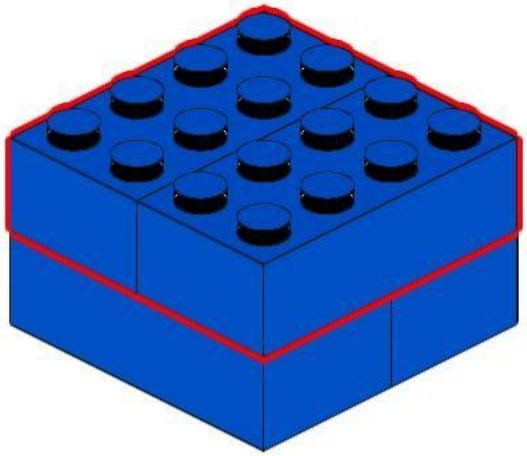

53

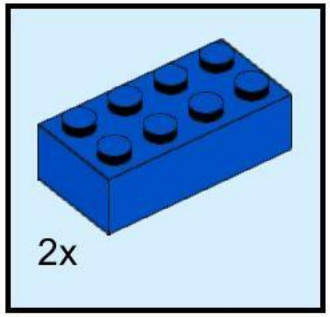

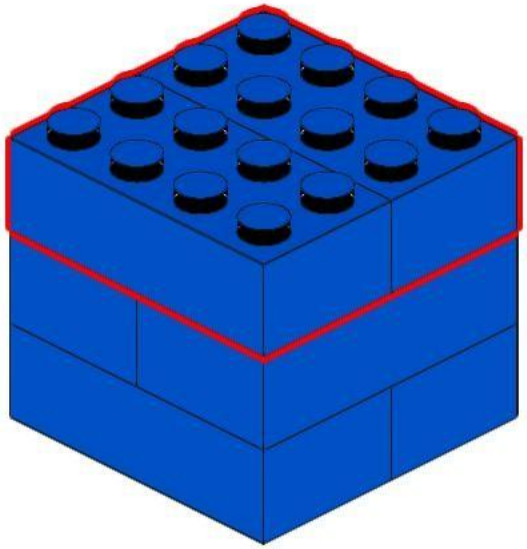

54

6x

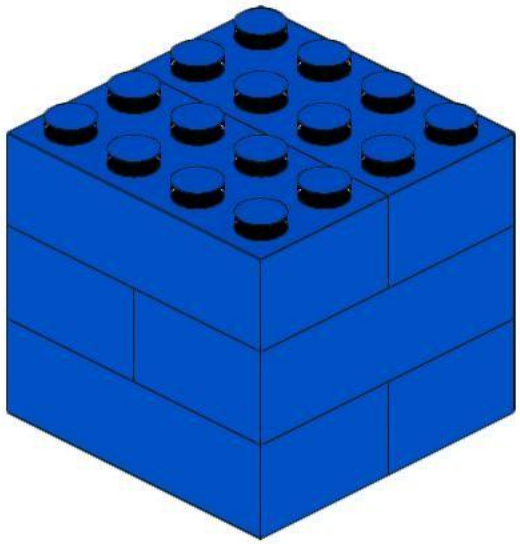

55

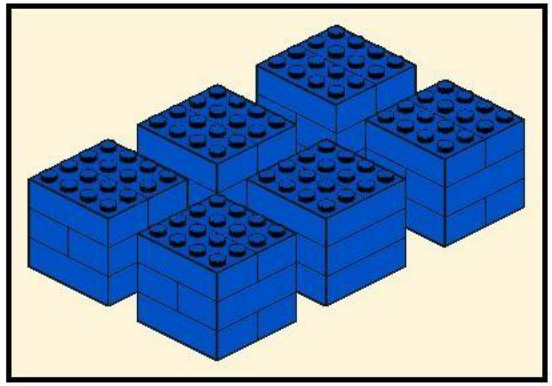

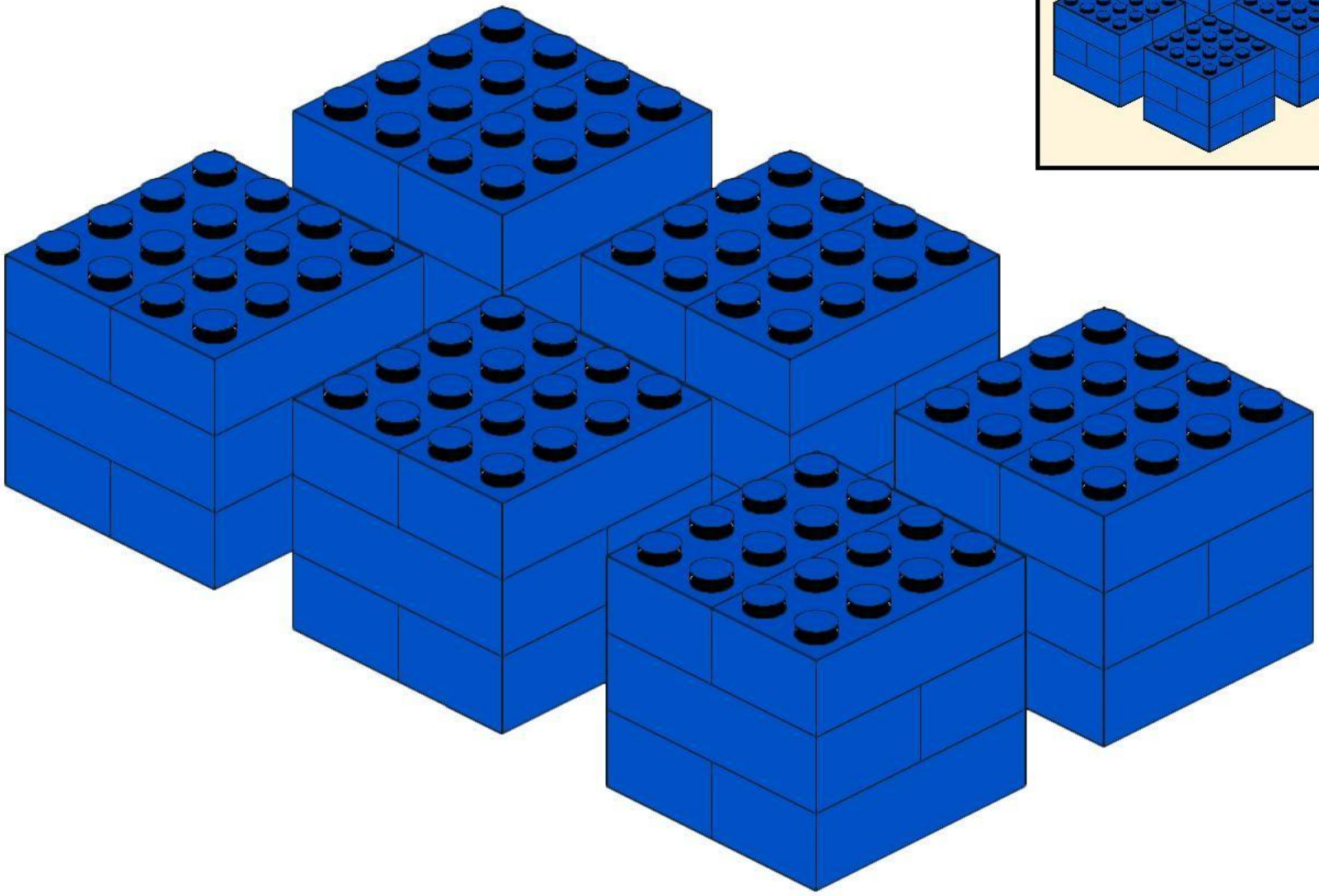

56

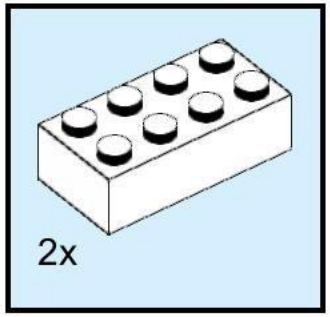

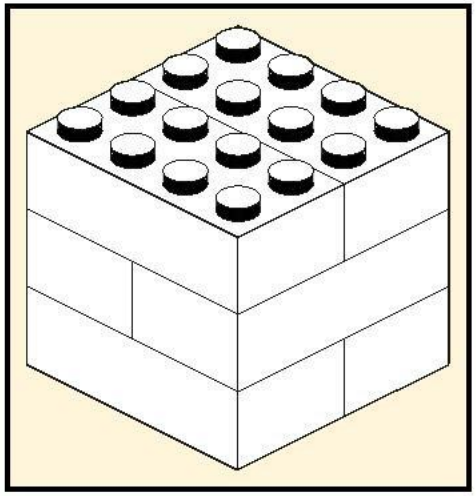

6x

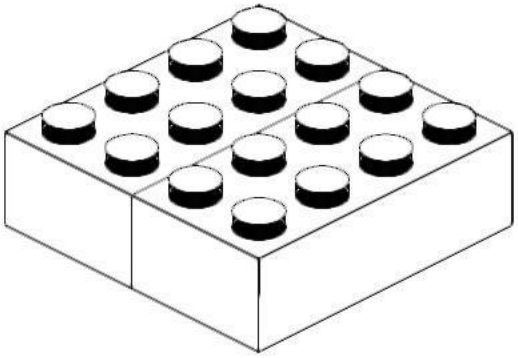

57

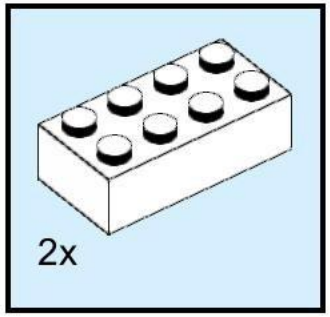

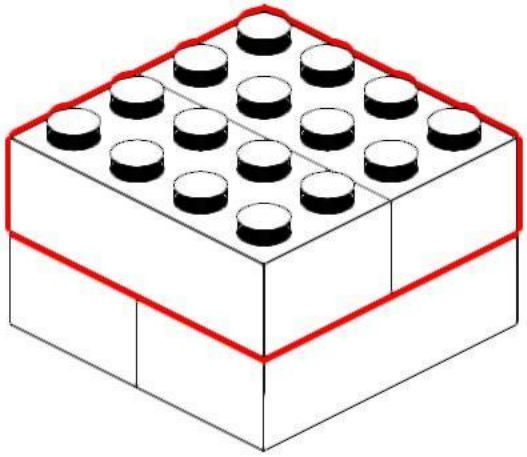

58

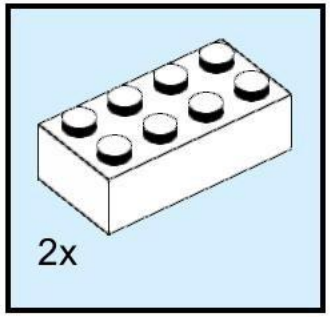

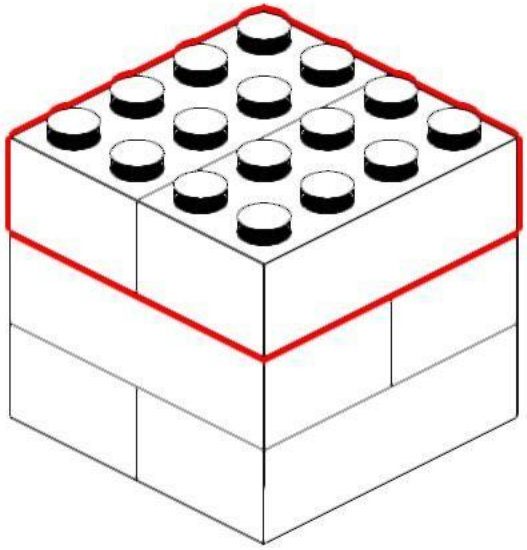

59

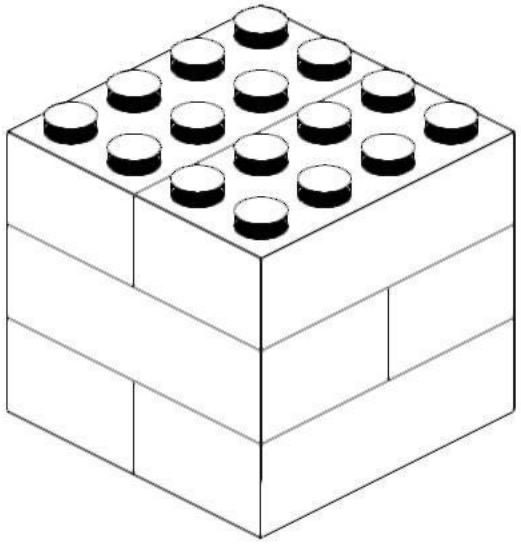

6x

60

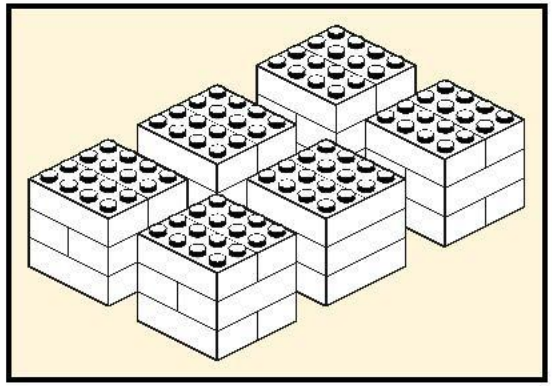

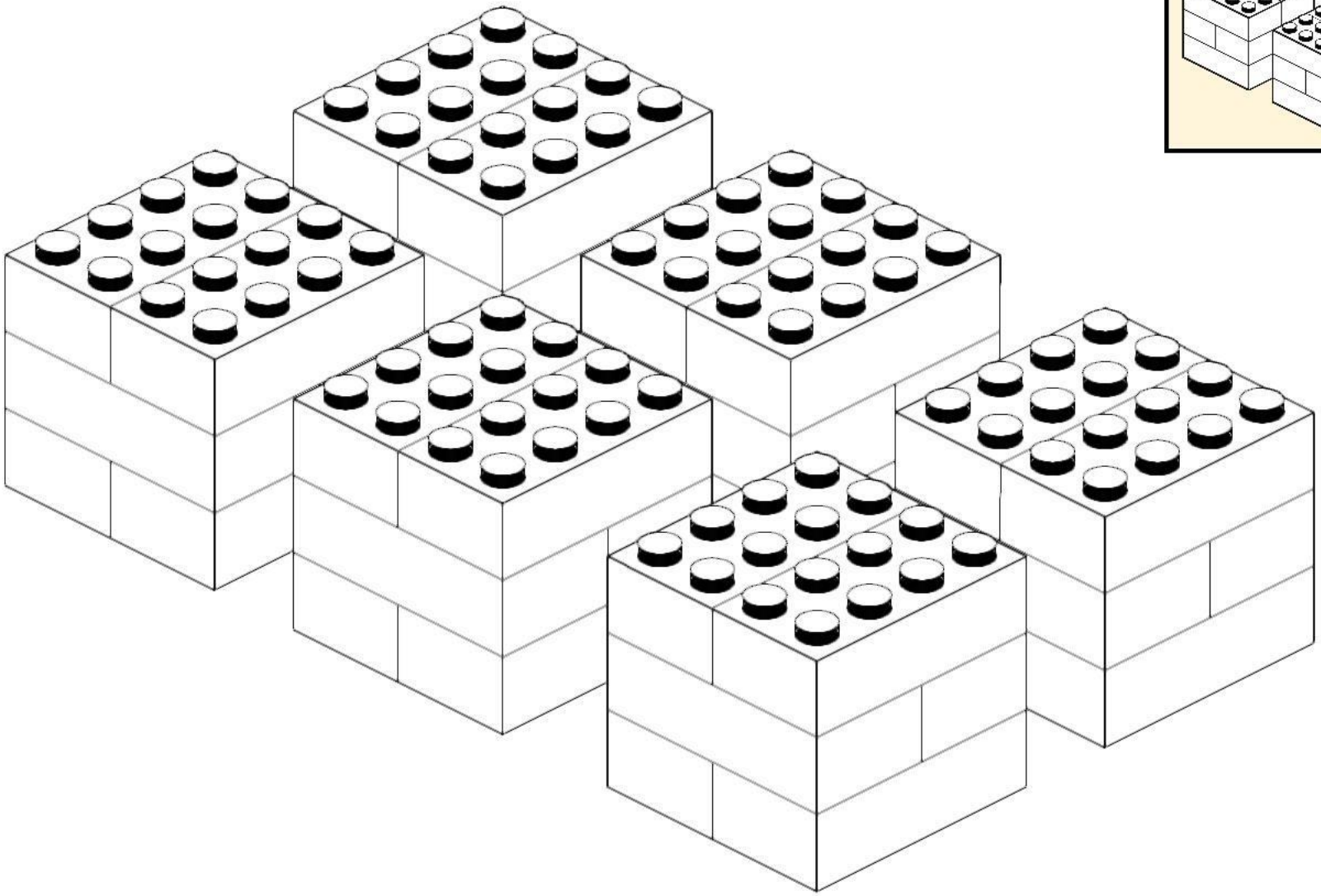

61

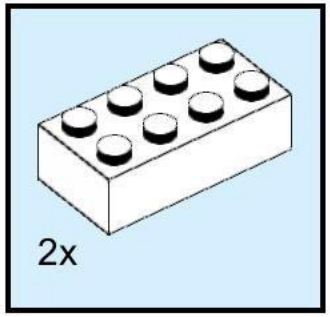

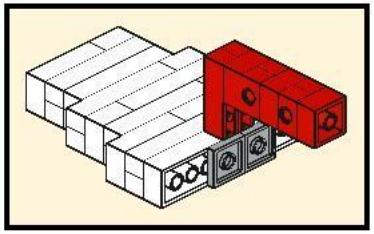

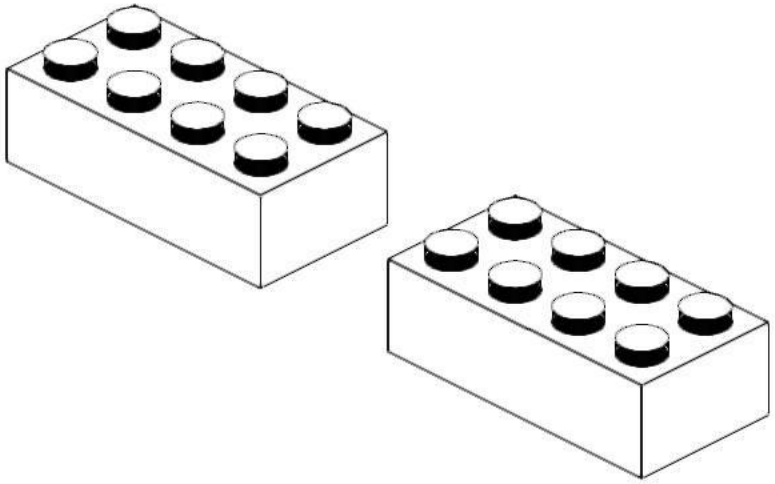

62

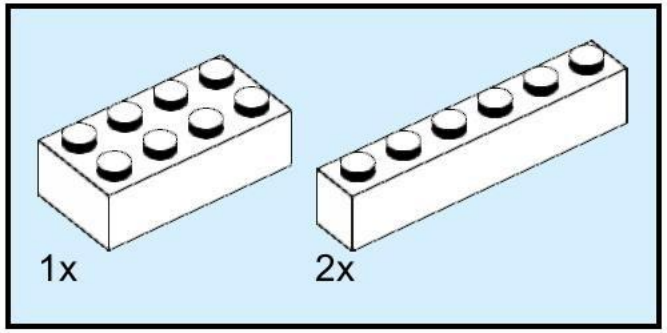

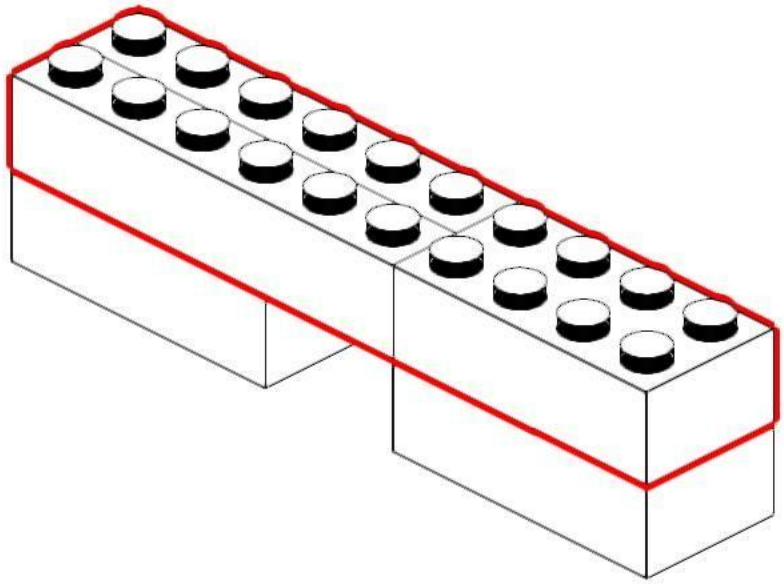

63

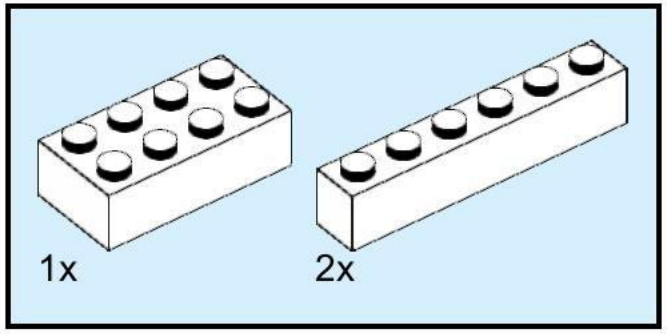

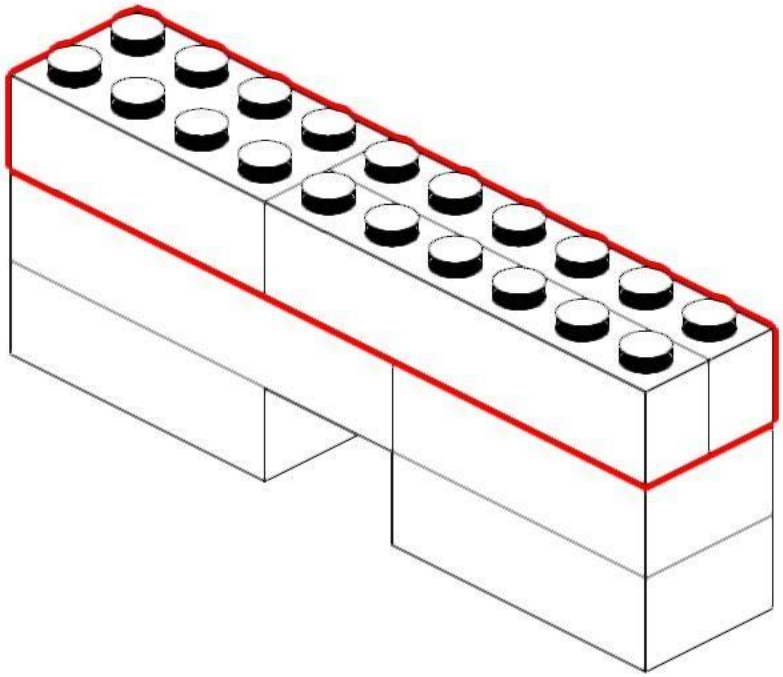

64

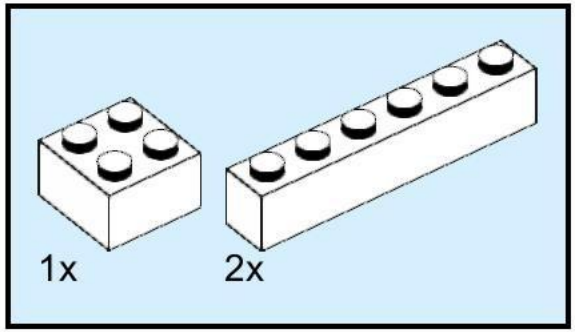

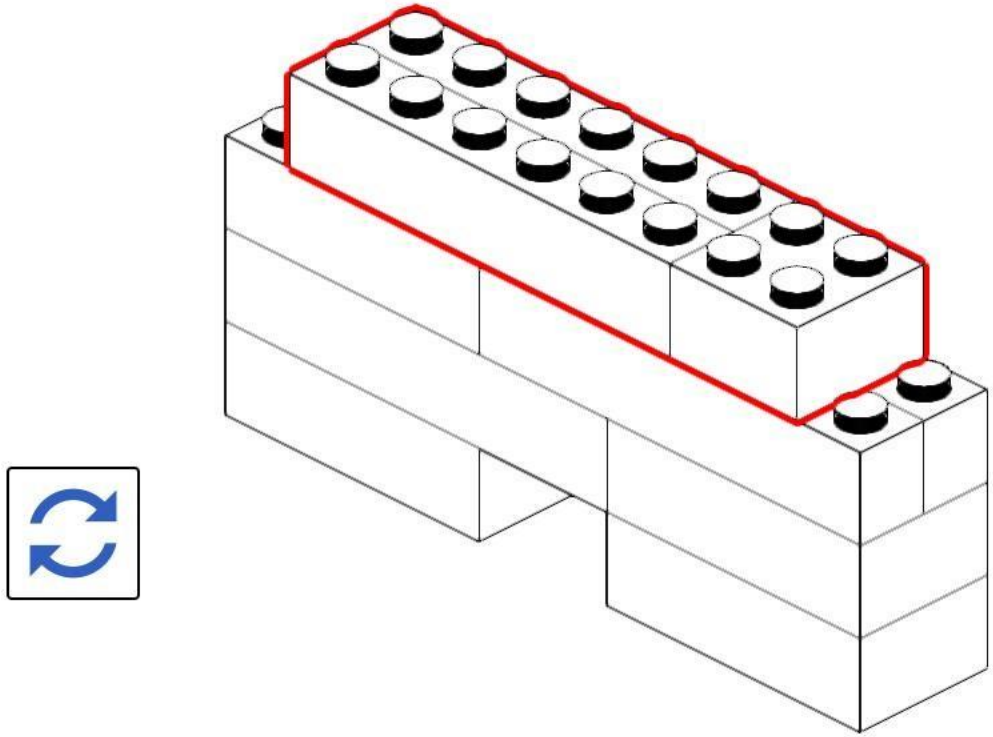

65

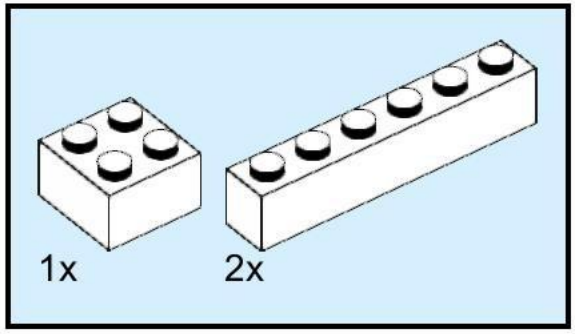

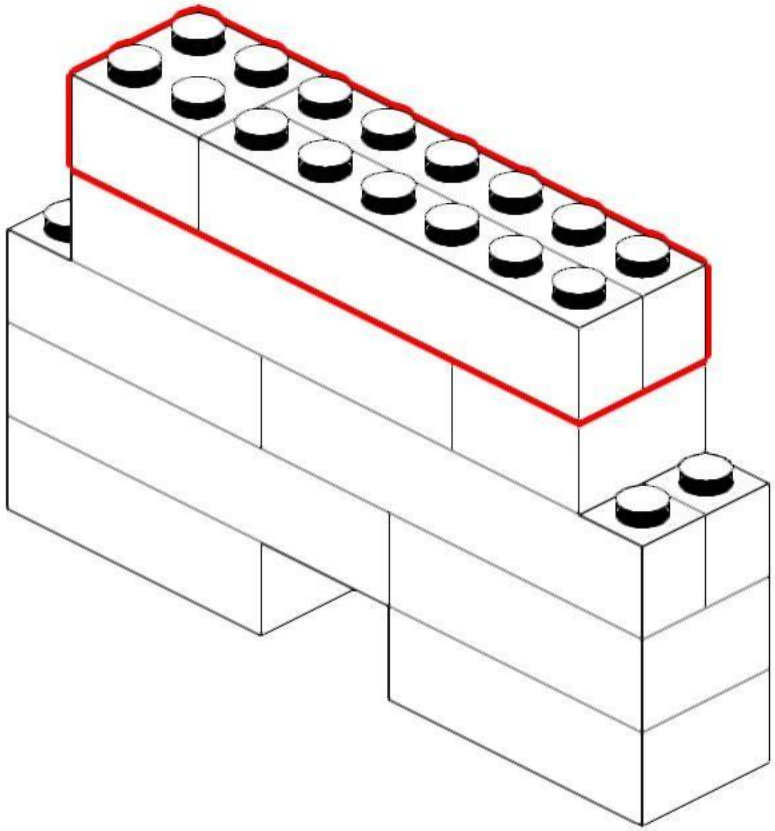

66

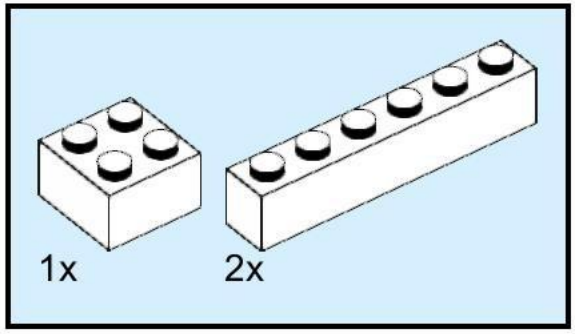

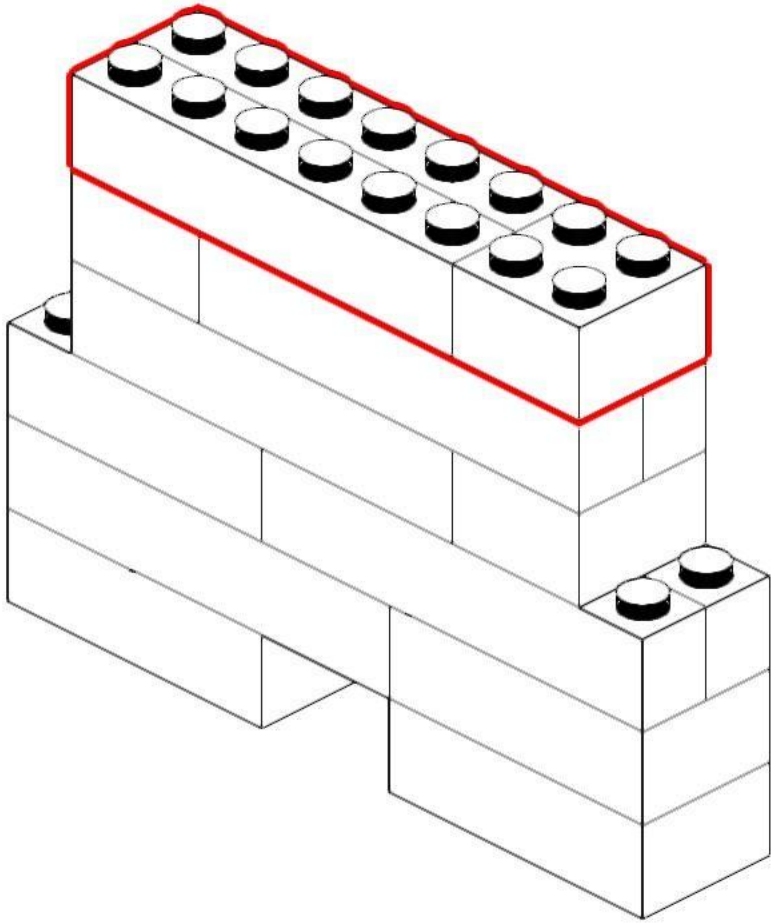

67

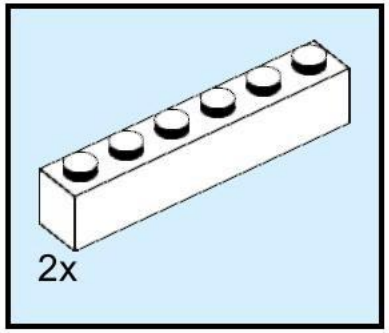

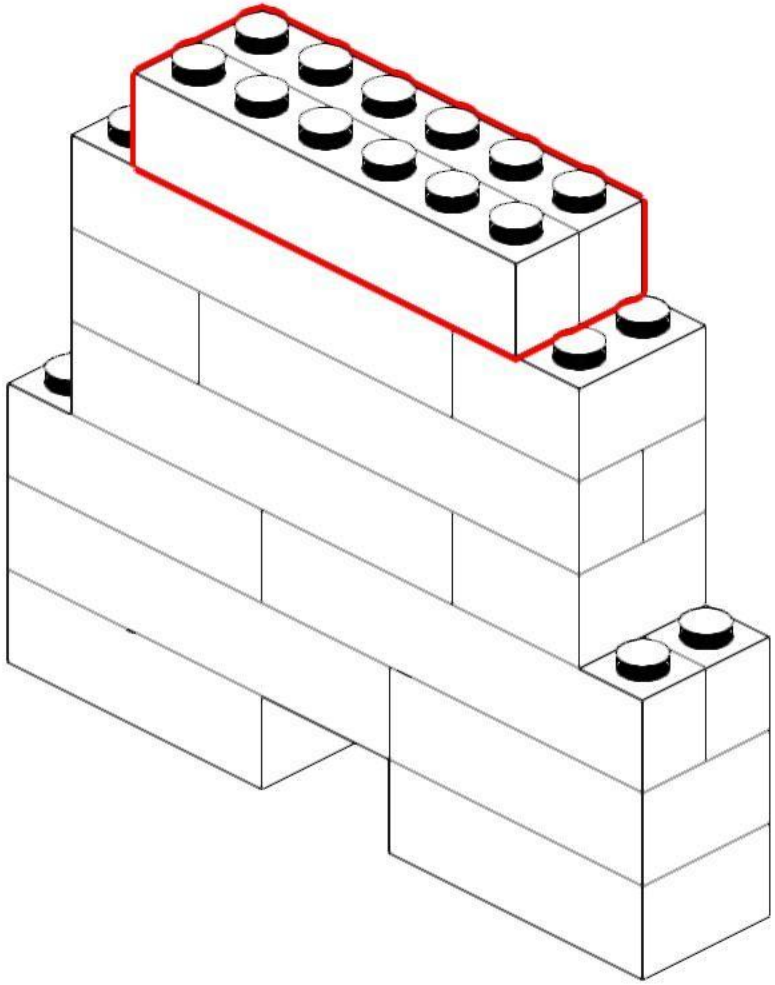

68

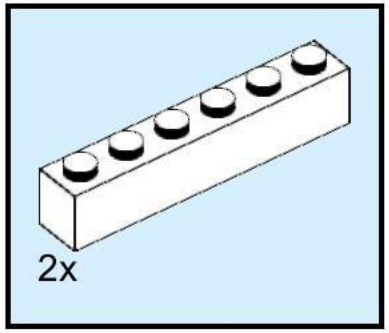

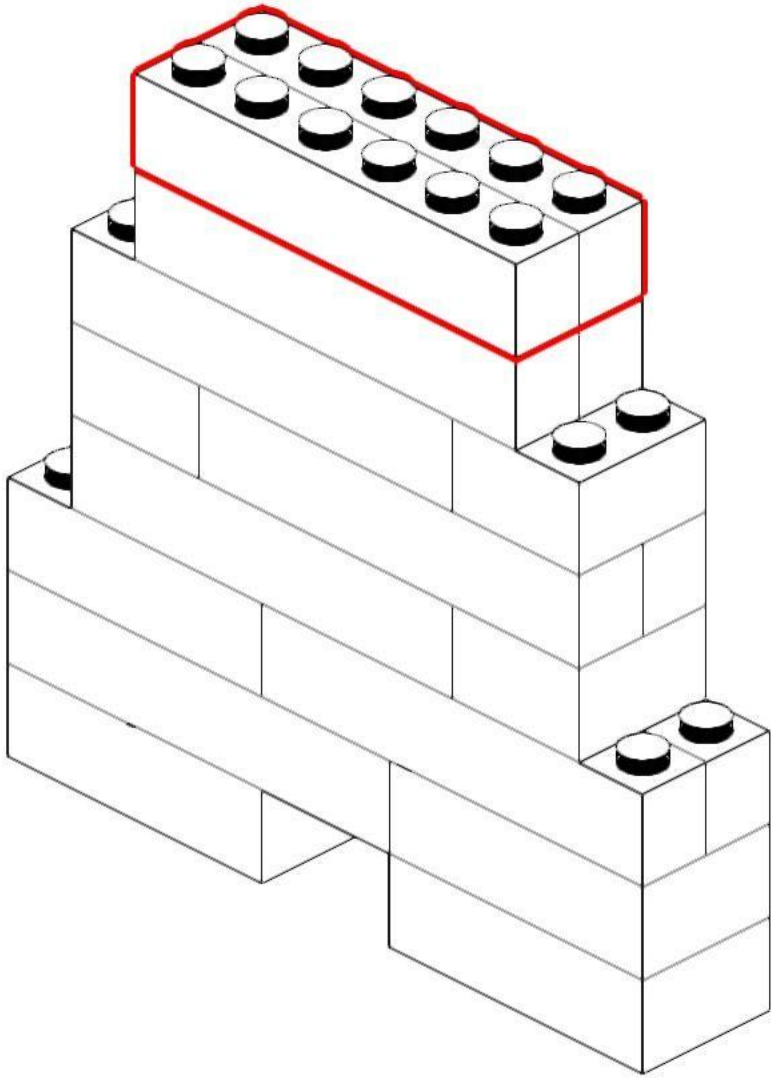

69

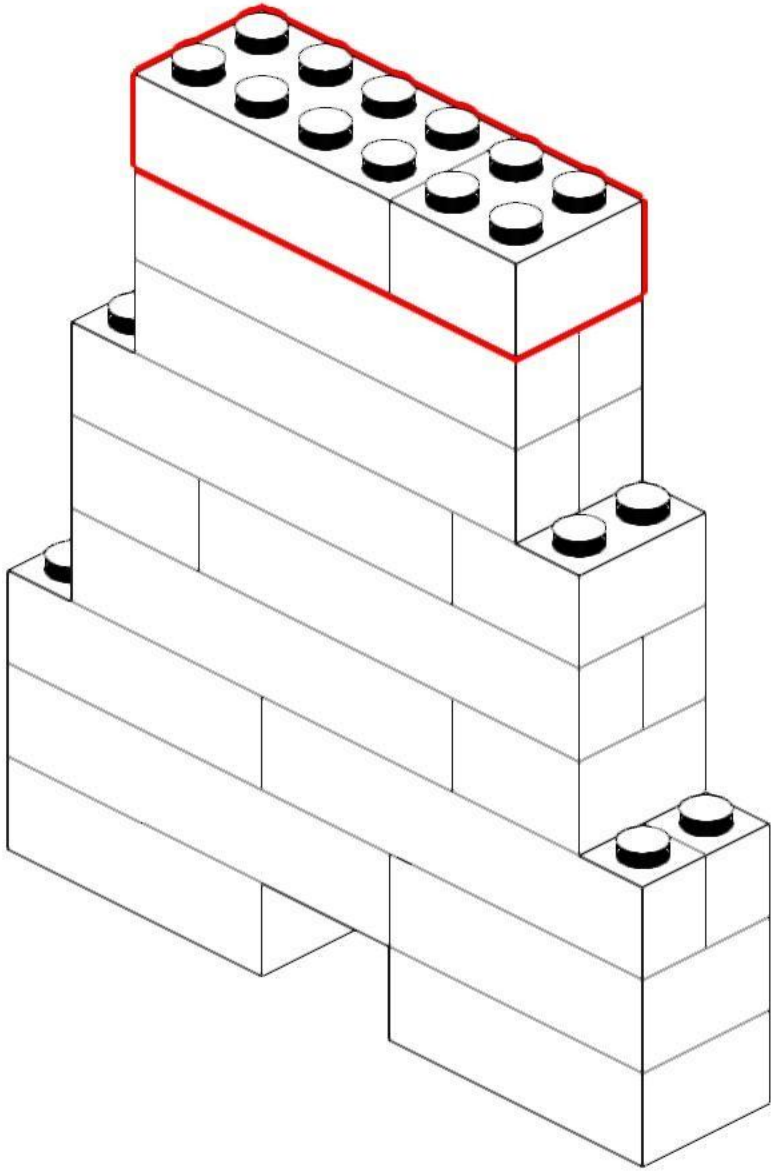

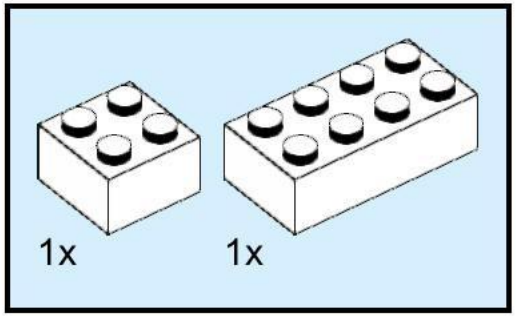

70

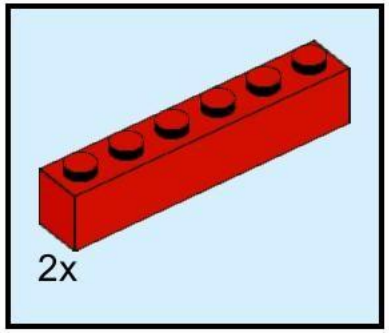

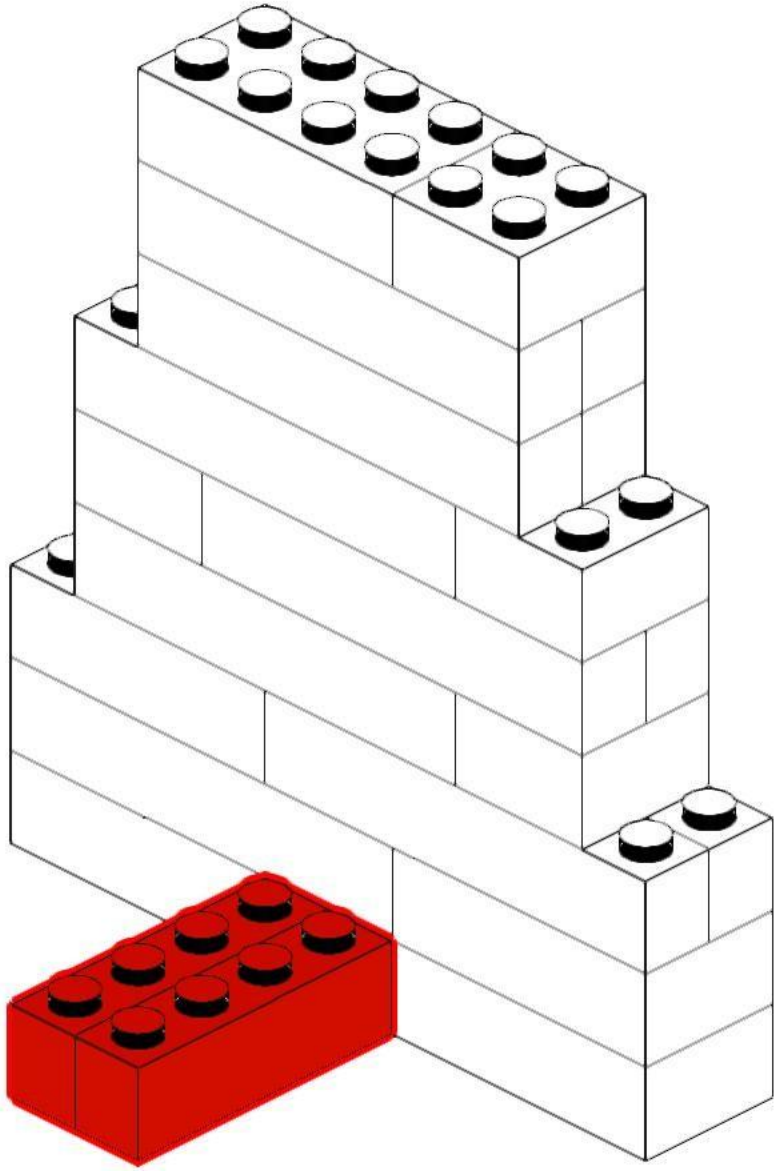

71

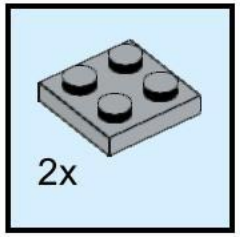

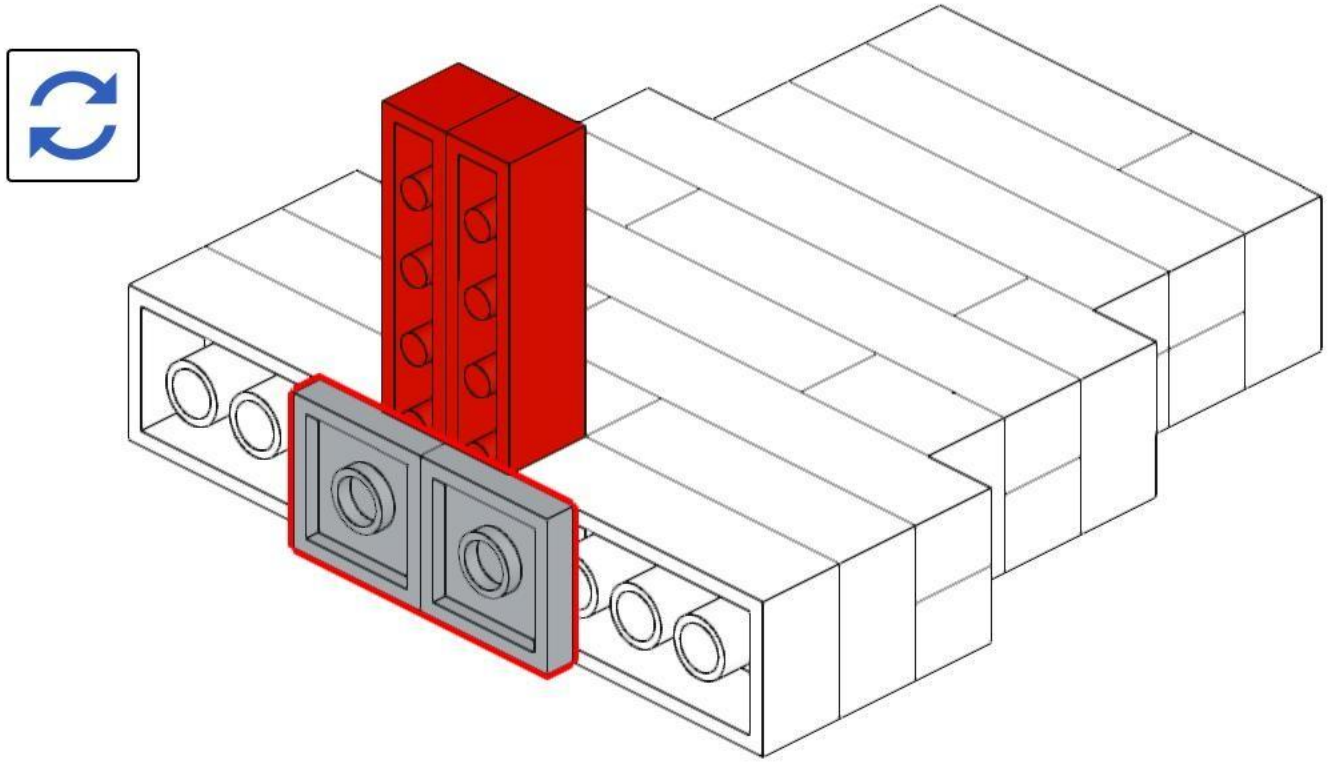

72

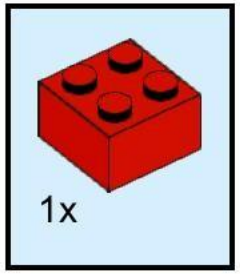

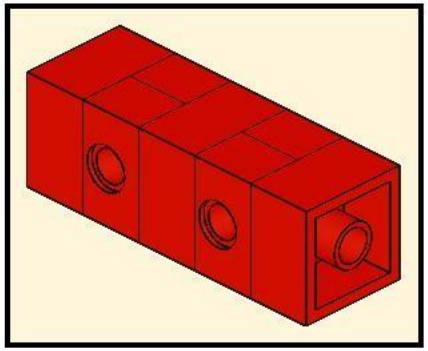

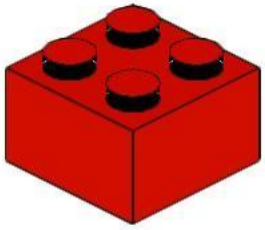

73

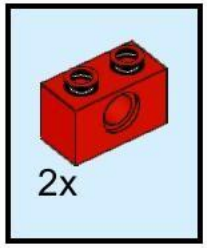

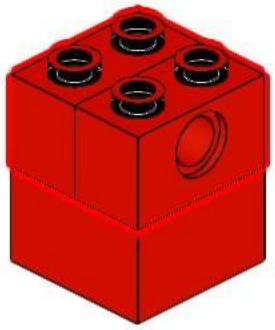

74

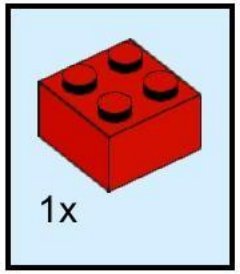

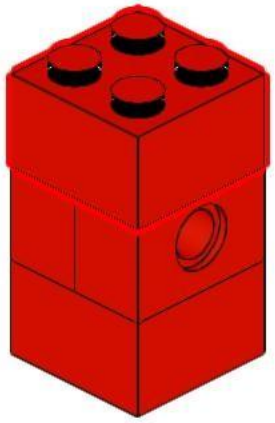

75

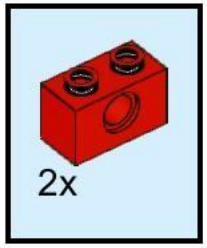

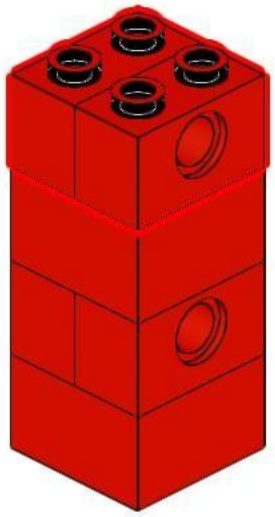

76

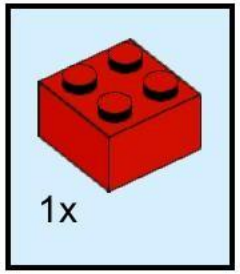

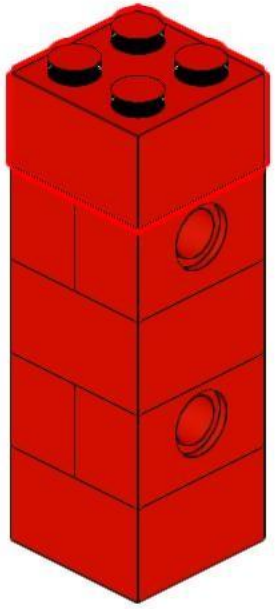

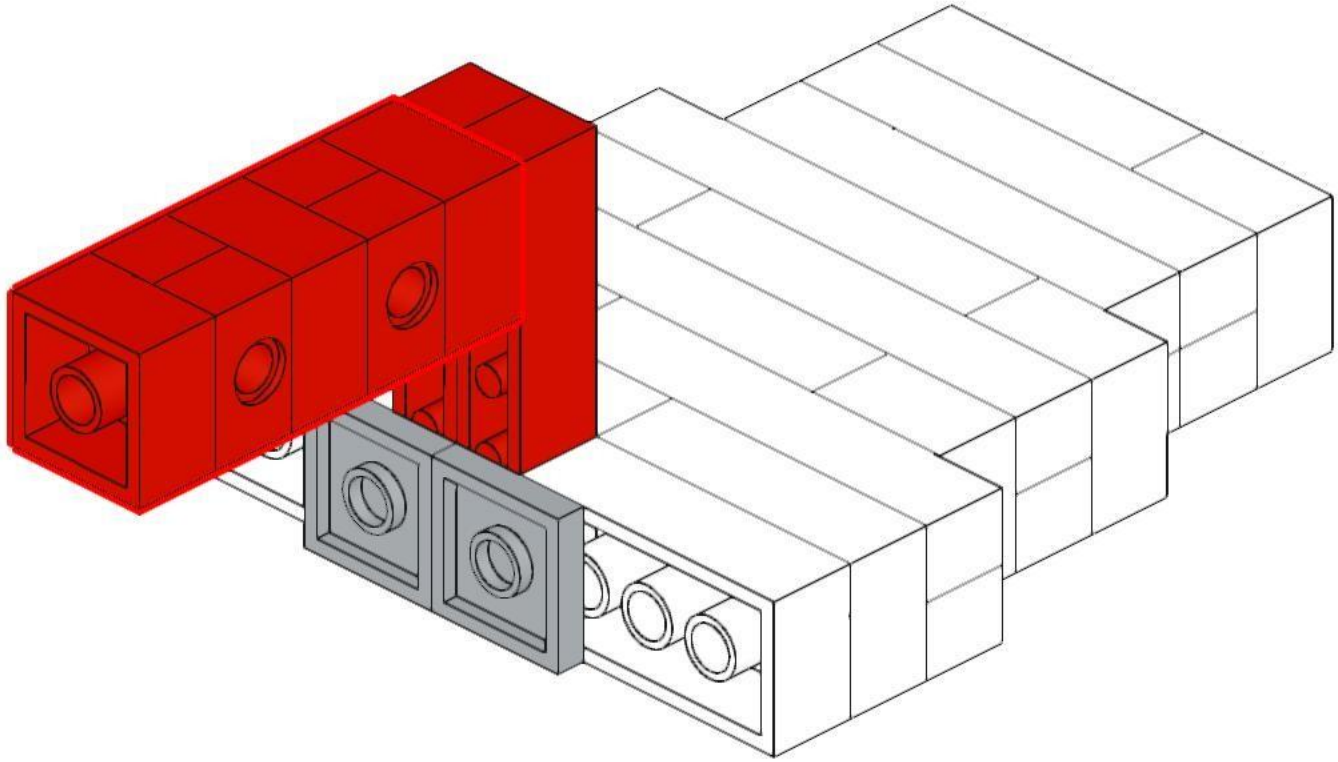

78

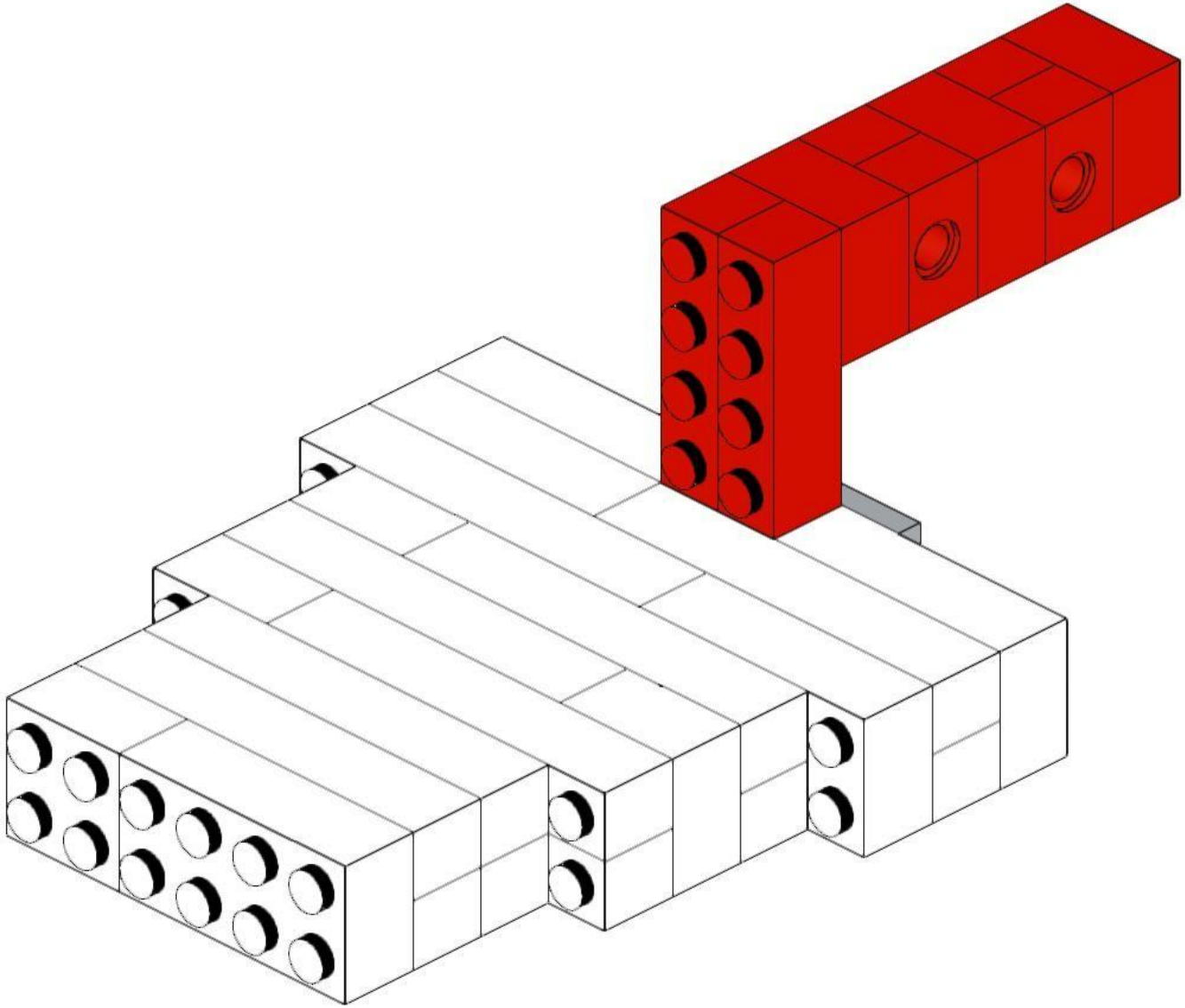

79

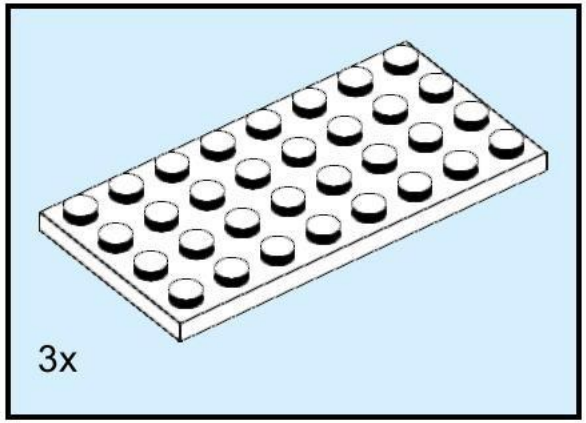

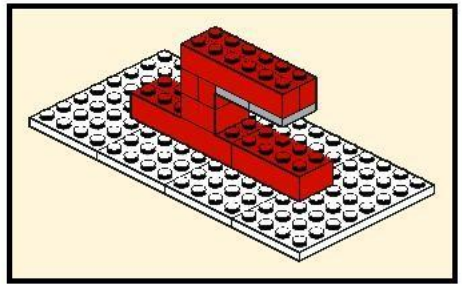

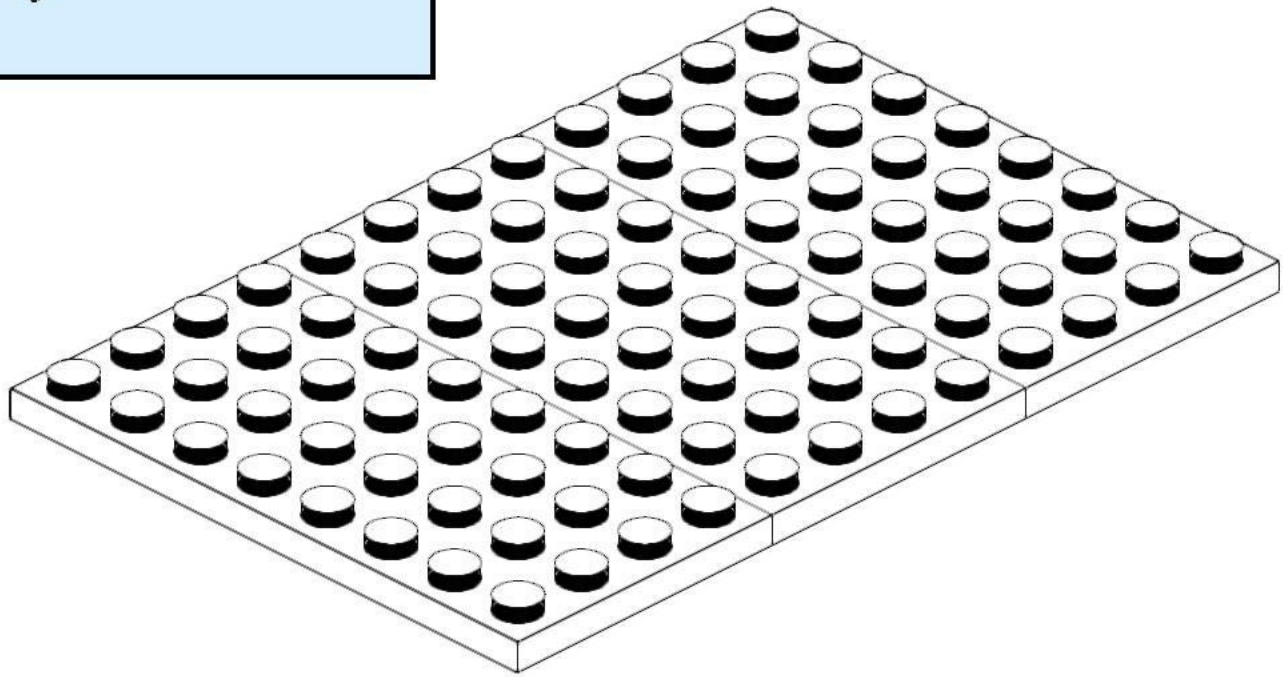

80

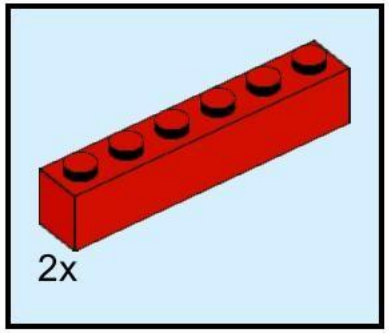

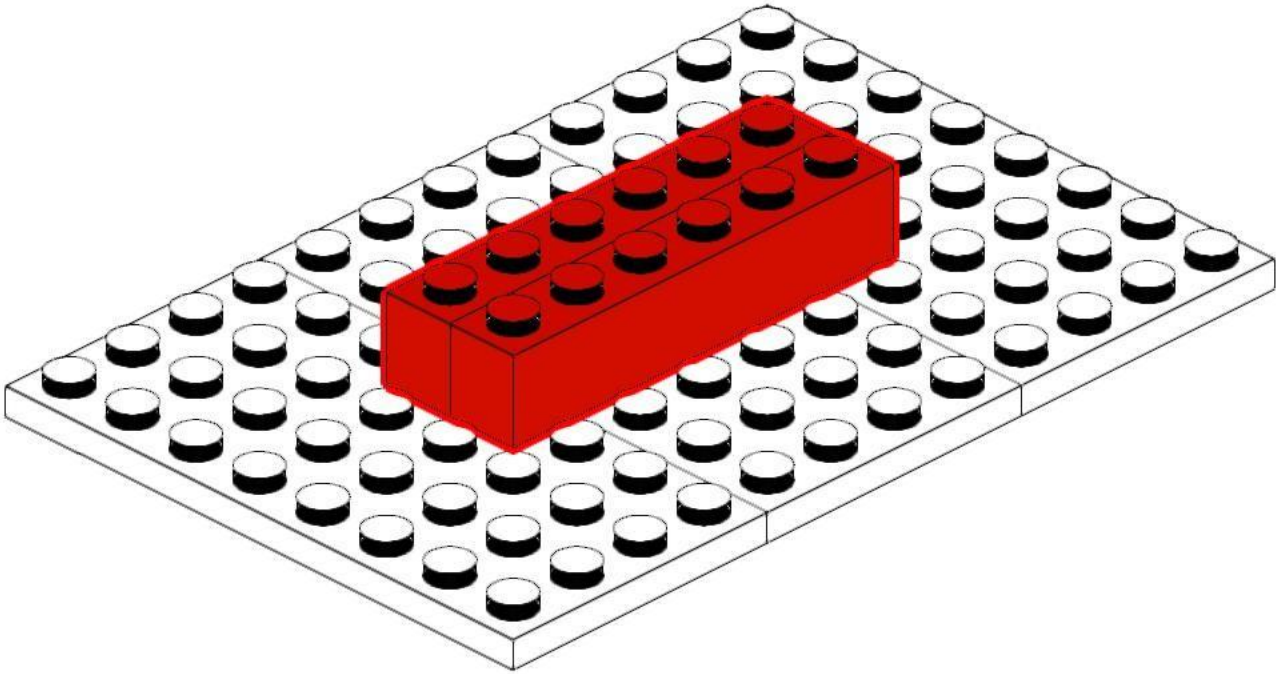

81

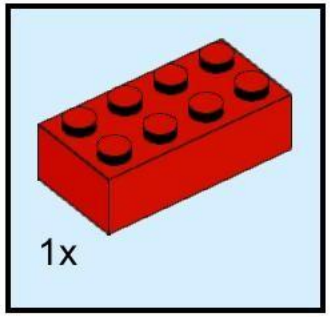

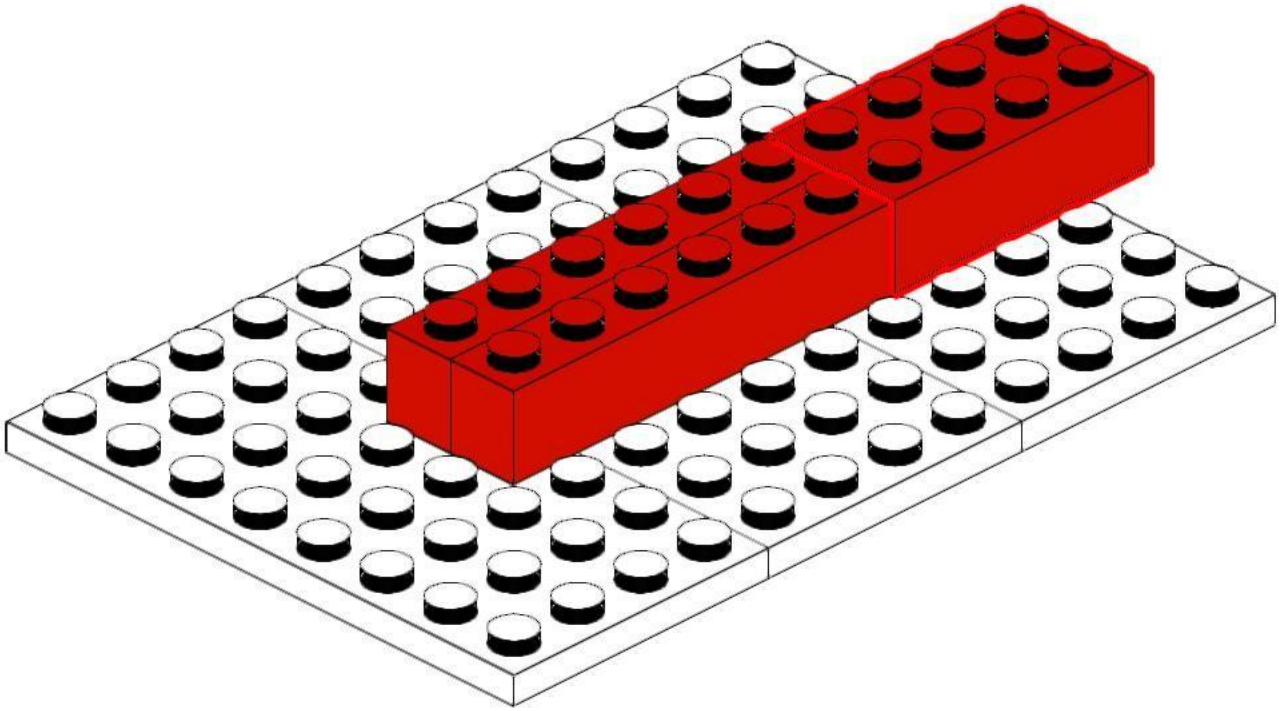

82

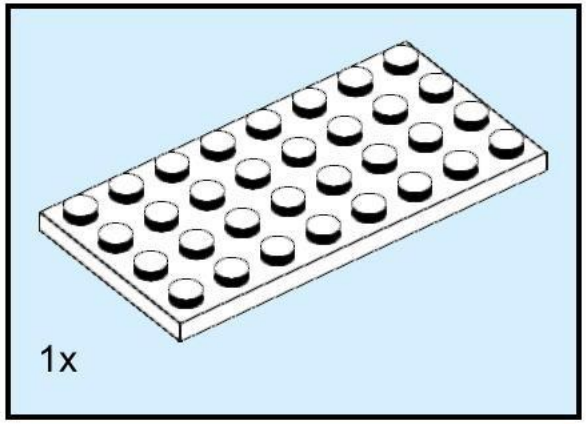

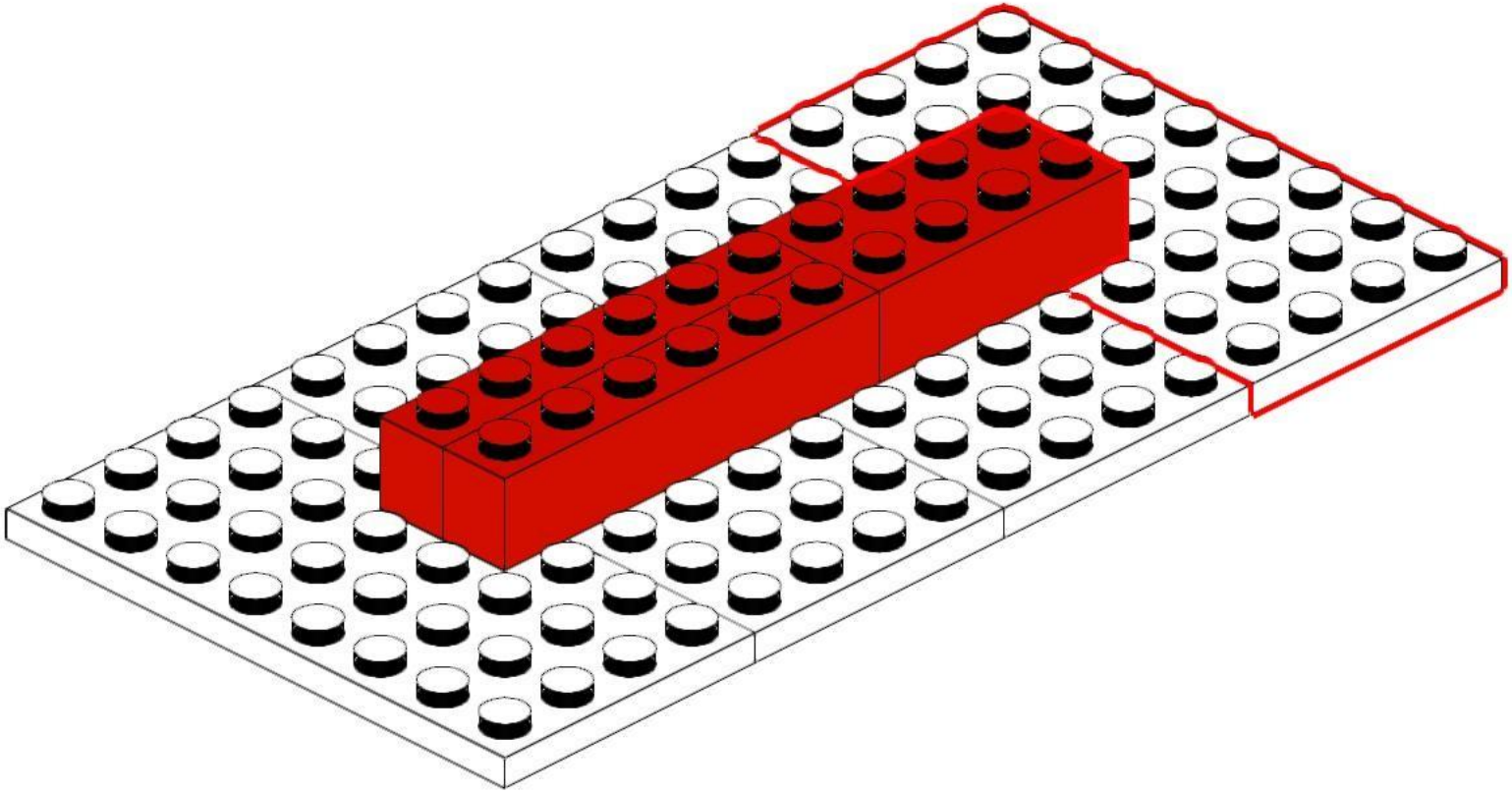

83

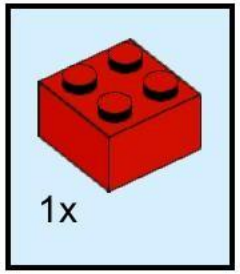

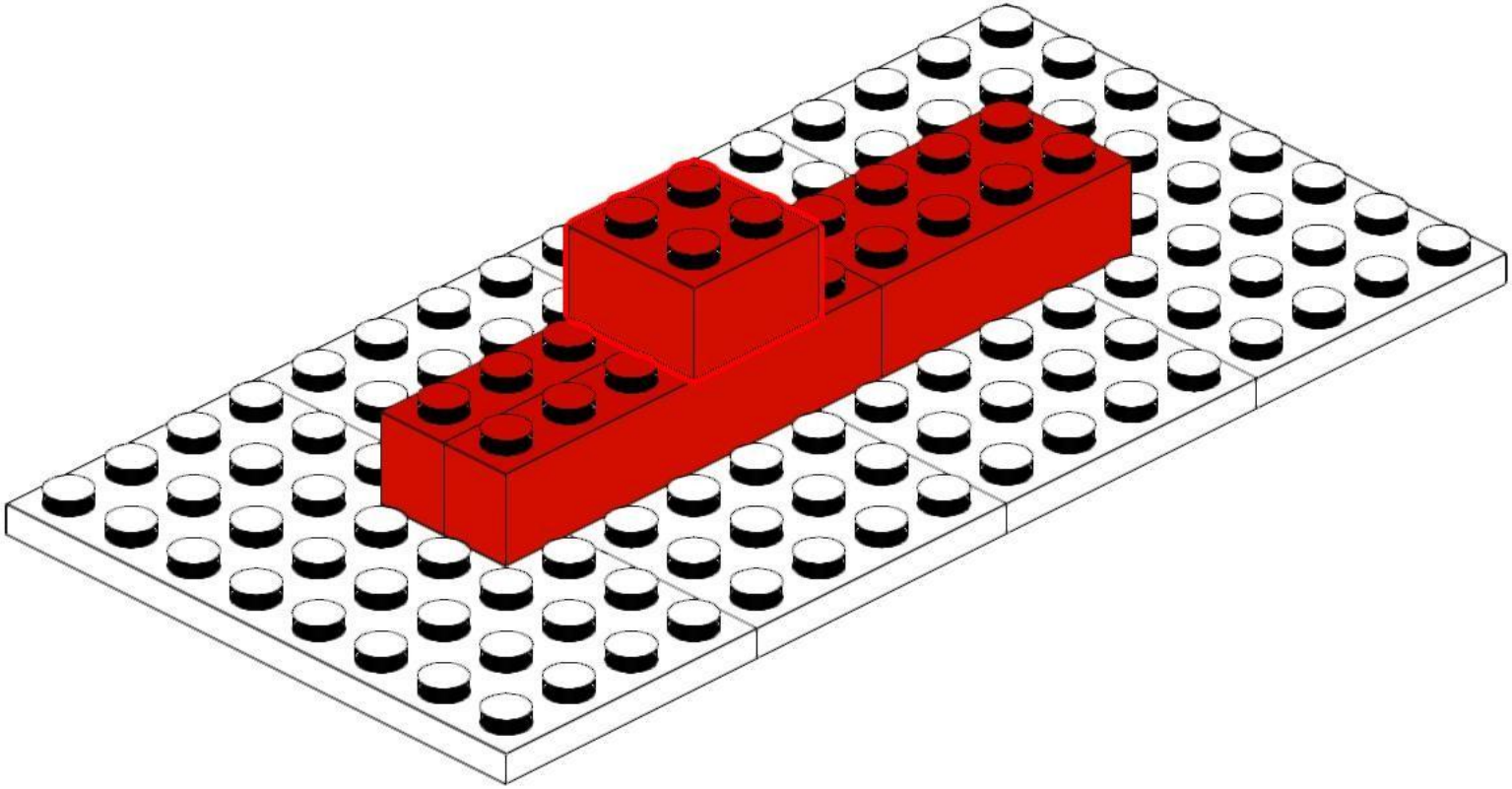

84

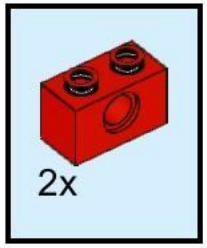

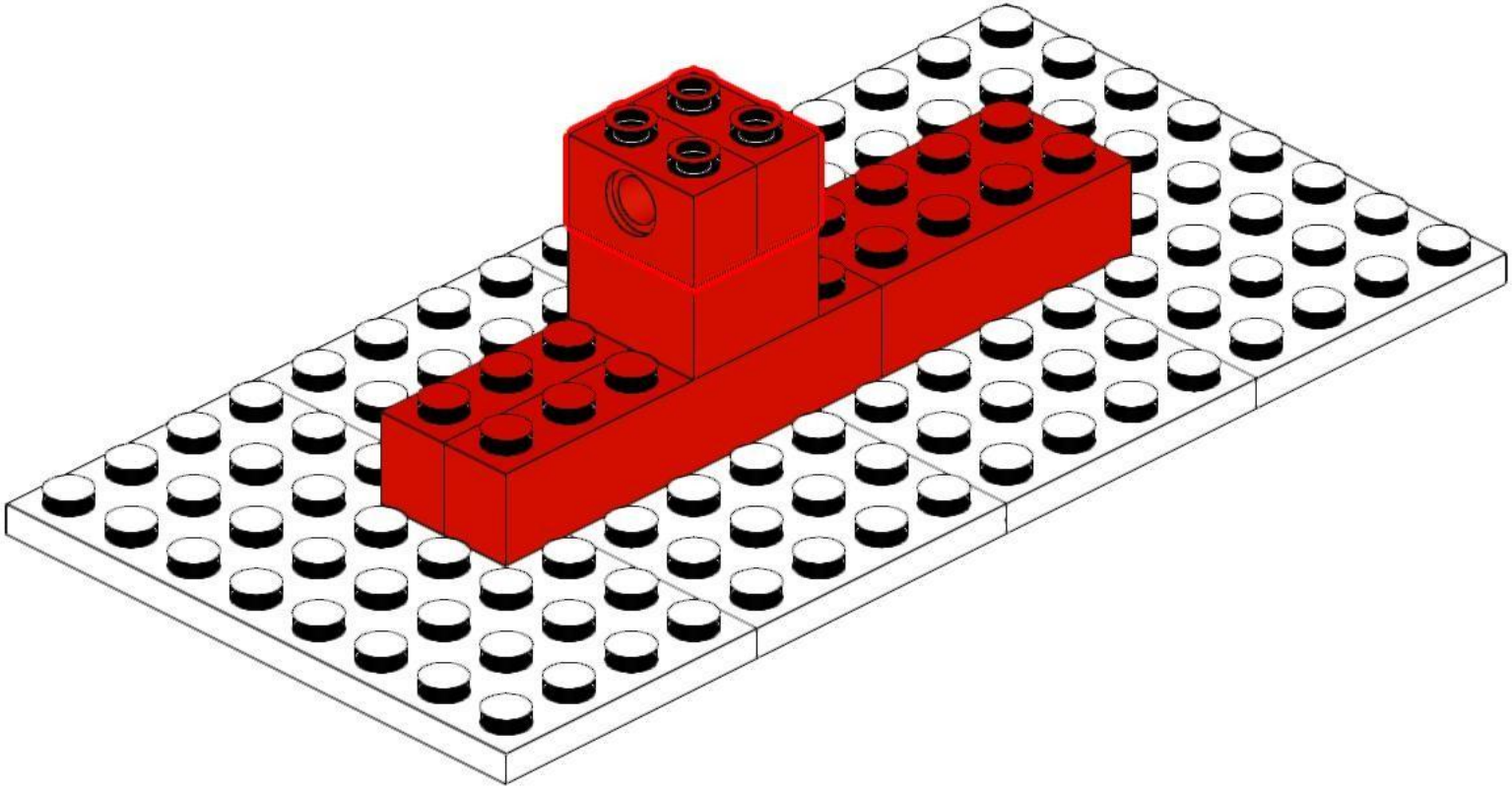

85

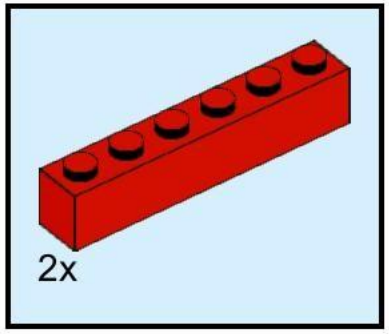

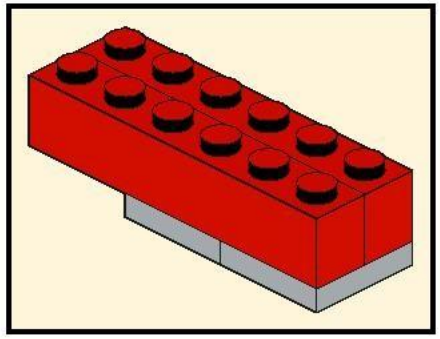

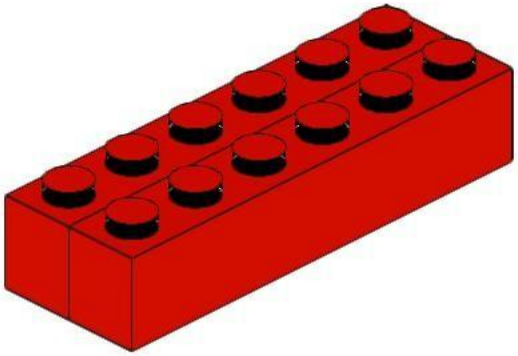

86

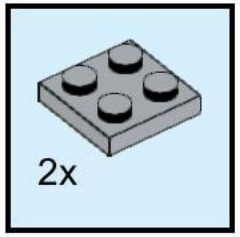

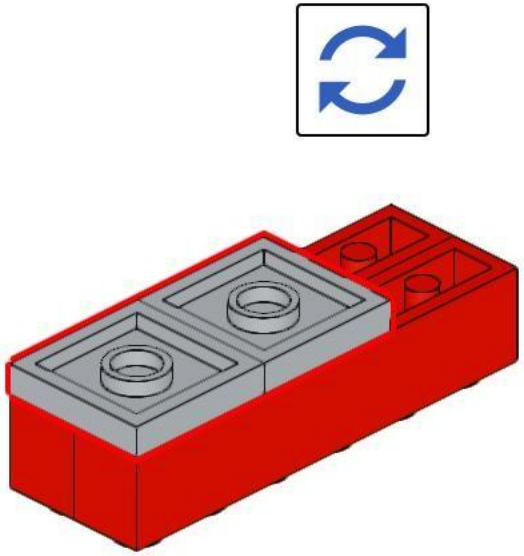

87

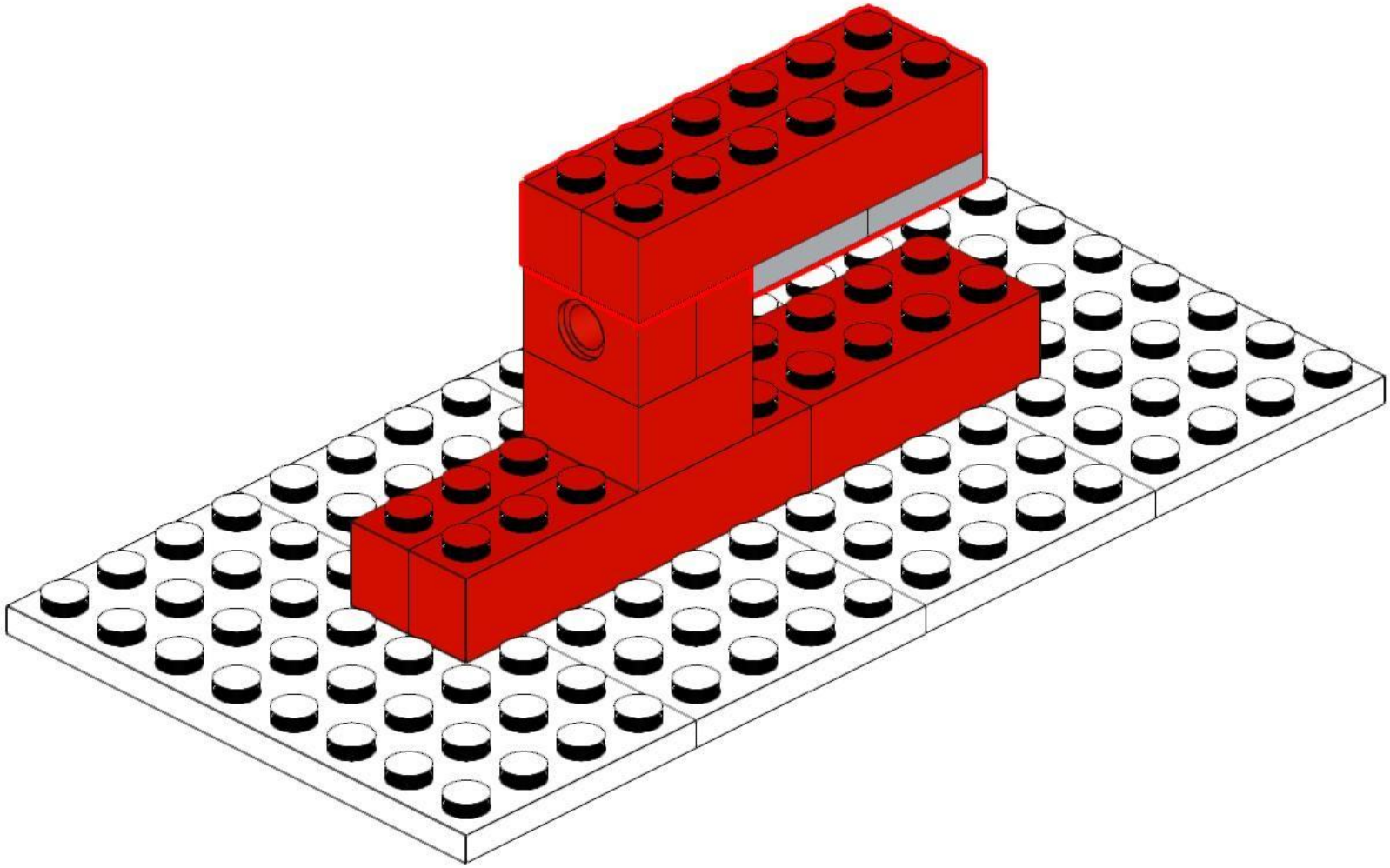

88

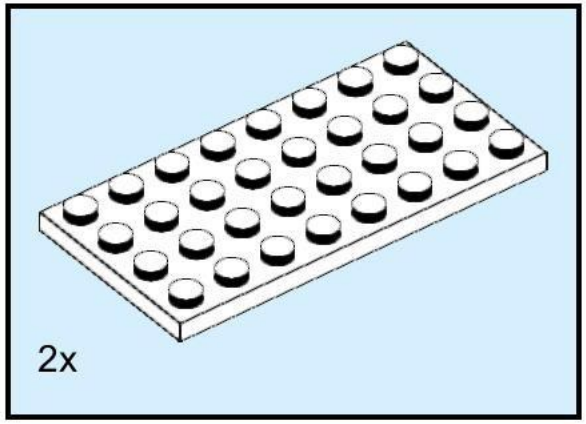

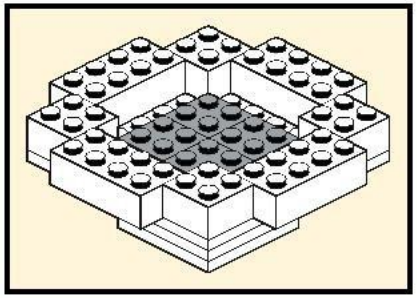

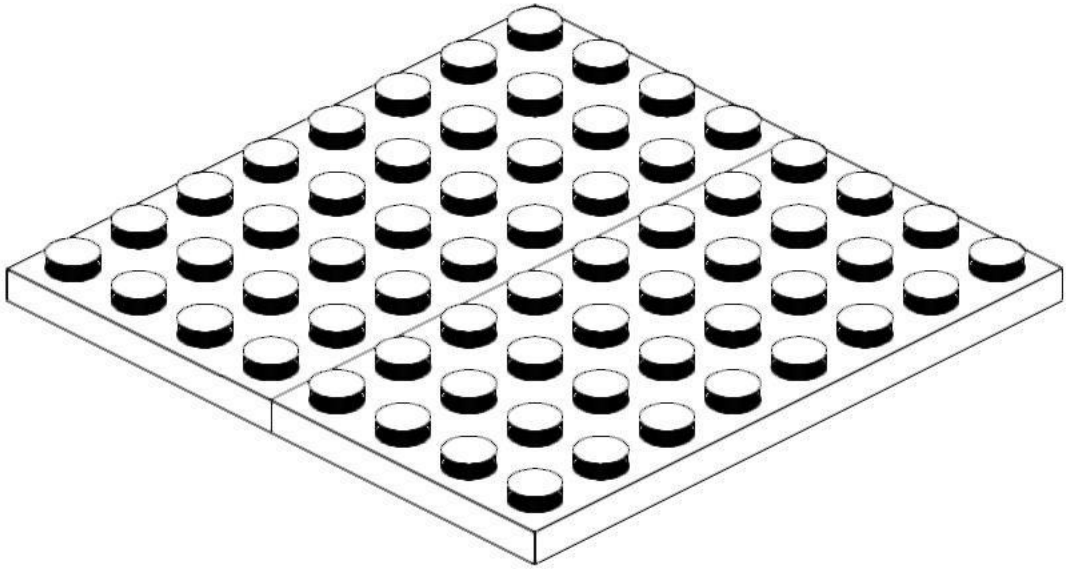

89

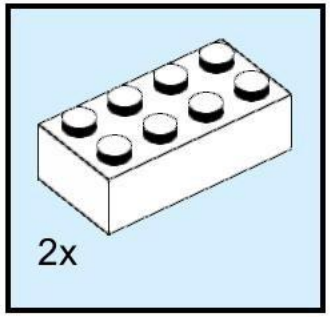

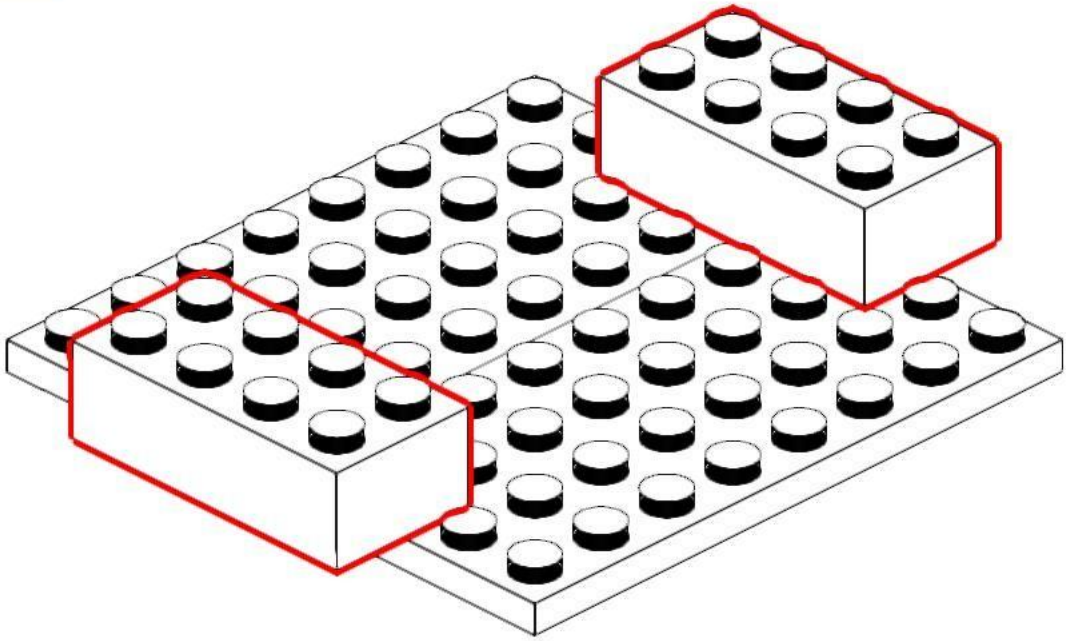

90

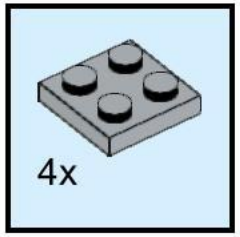

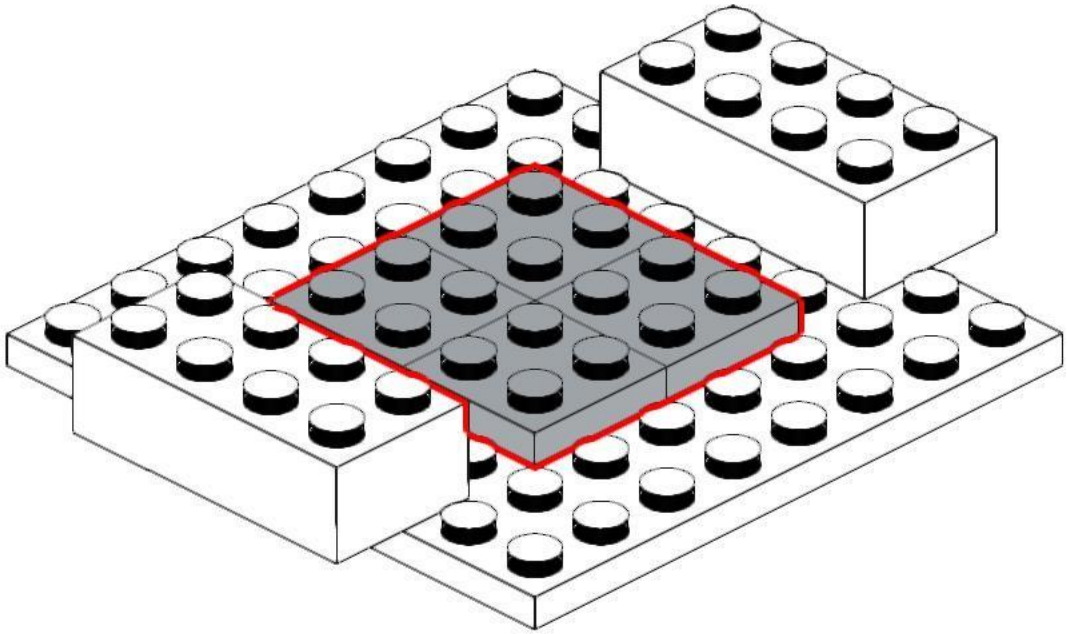

91

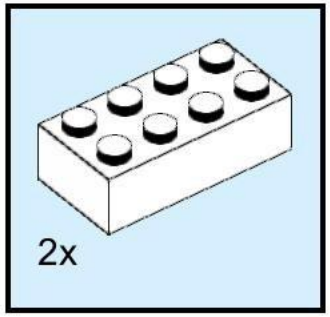

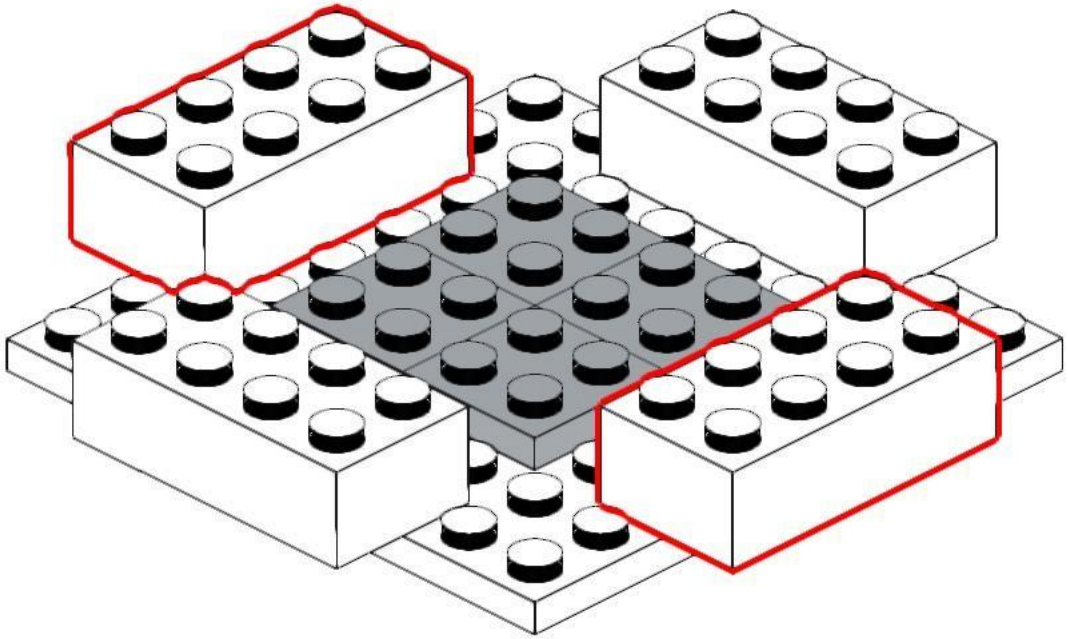

92

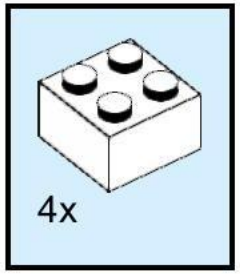

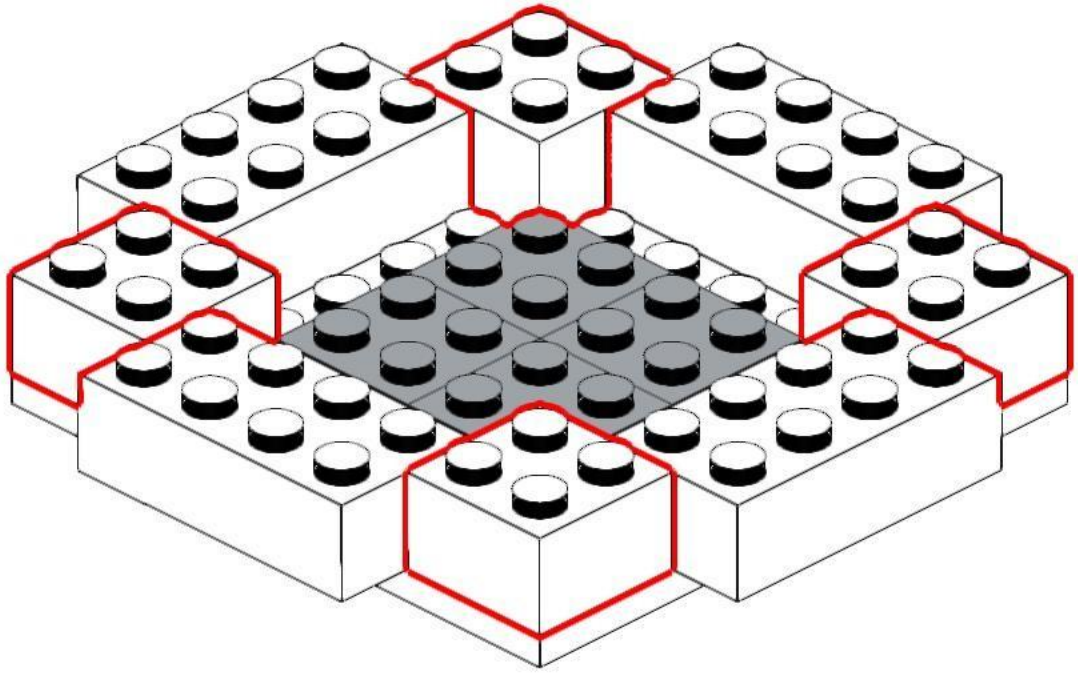

93

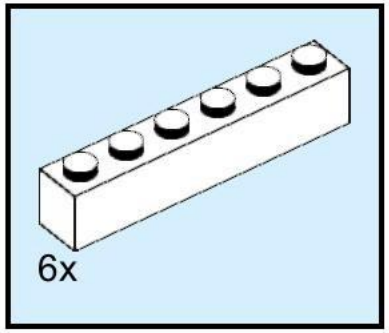

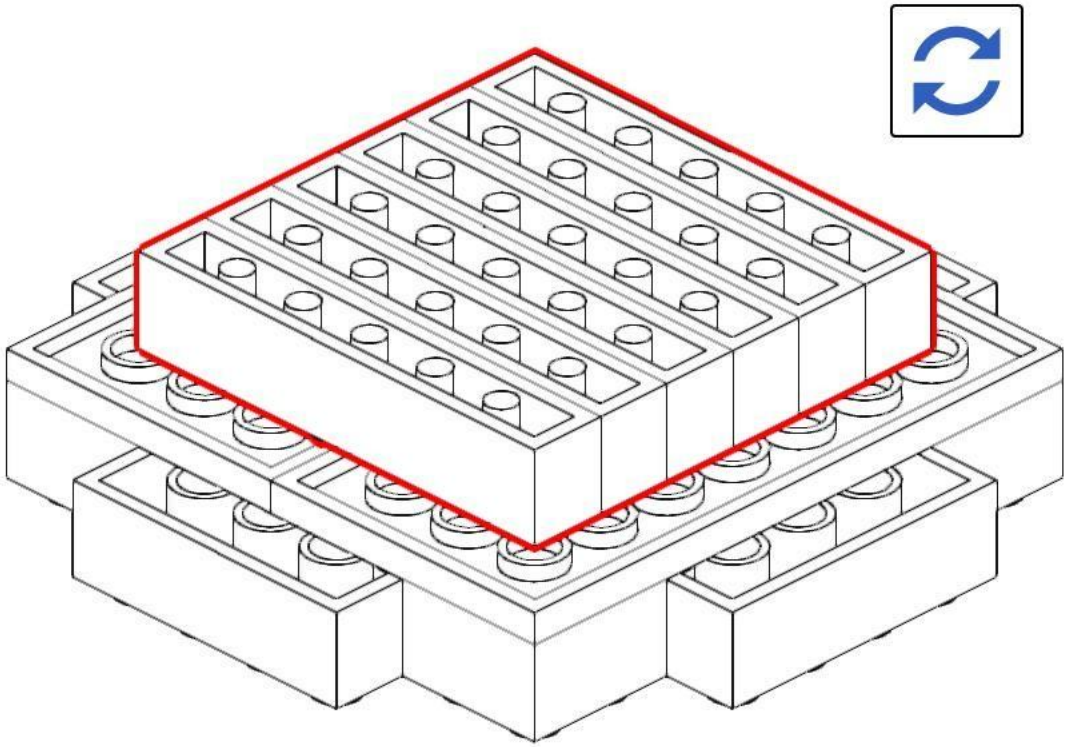

94

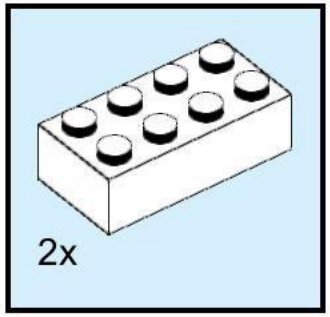

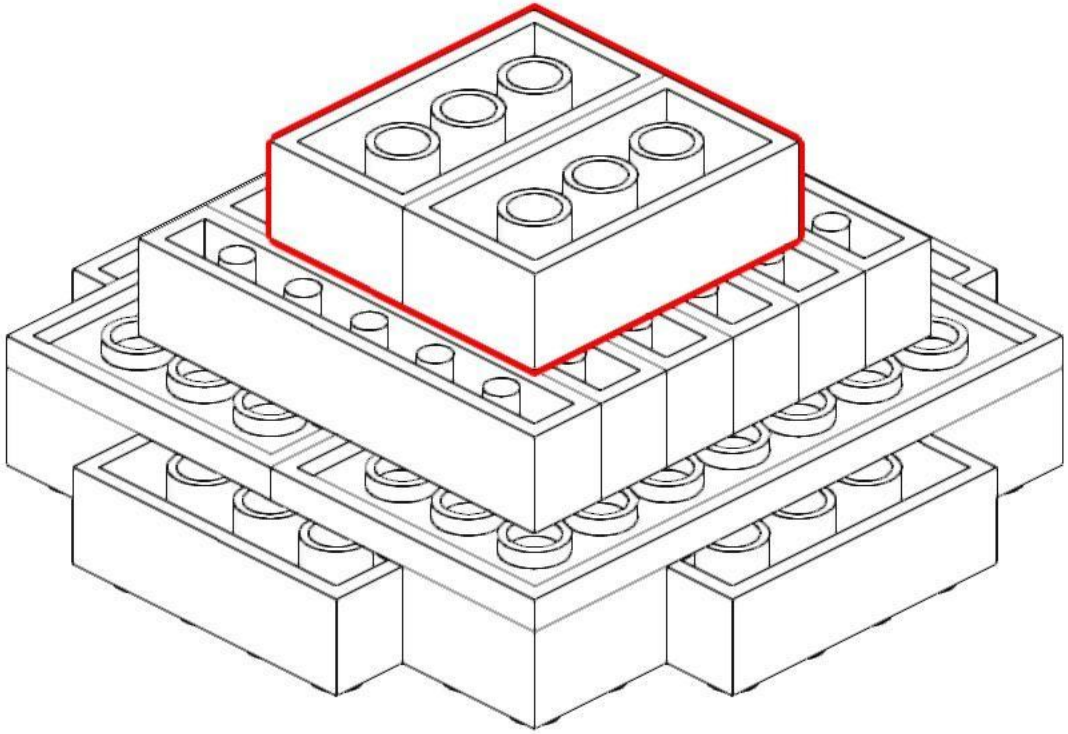

95

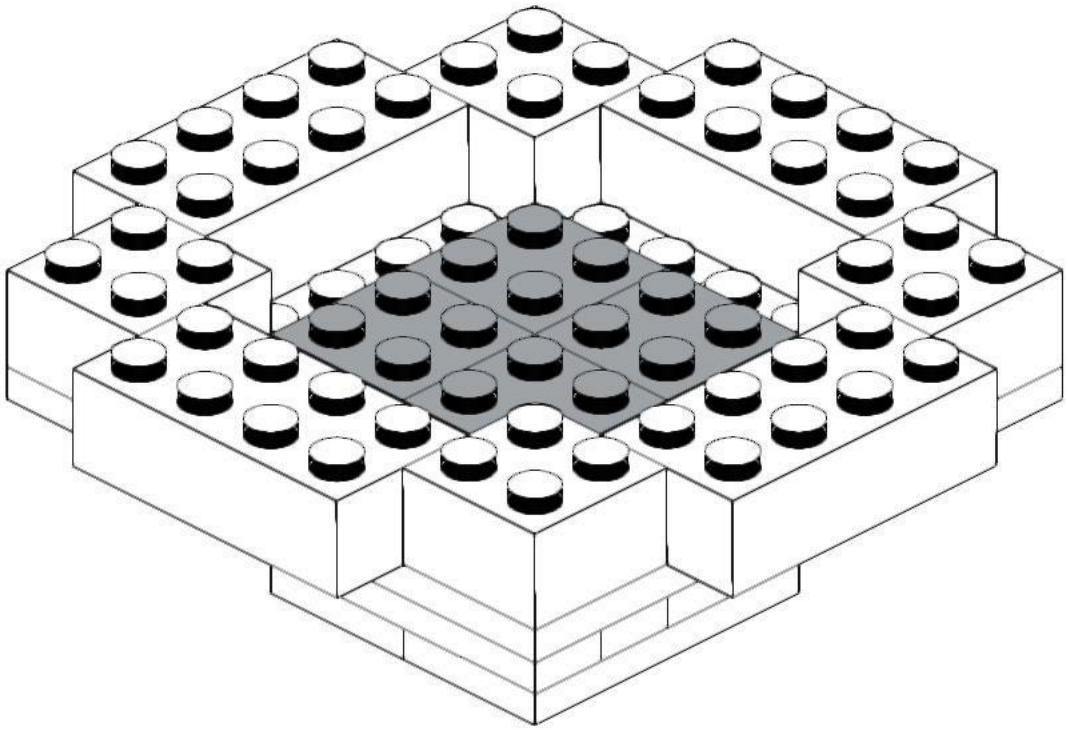

96

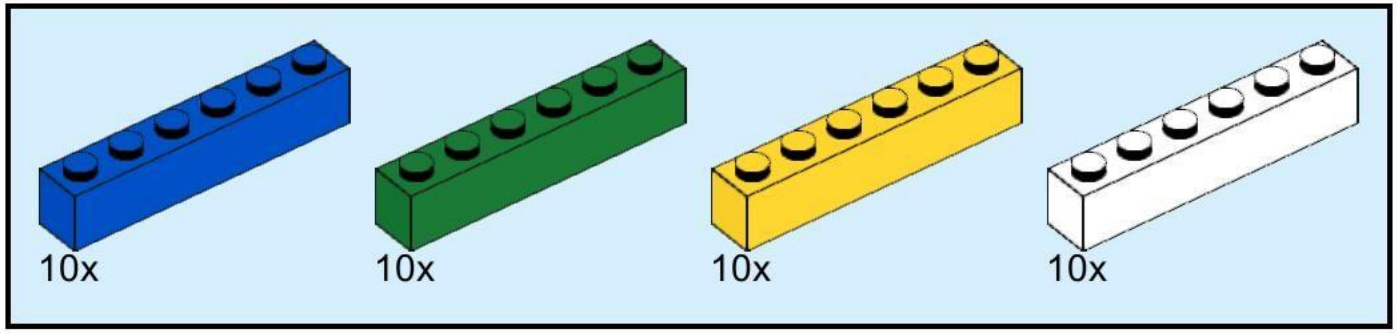

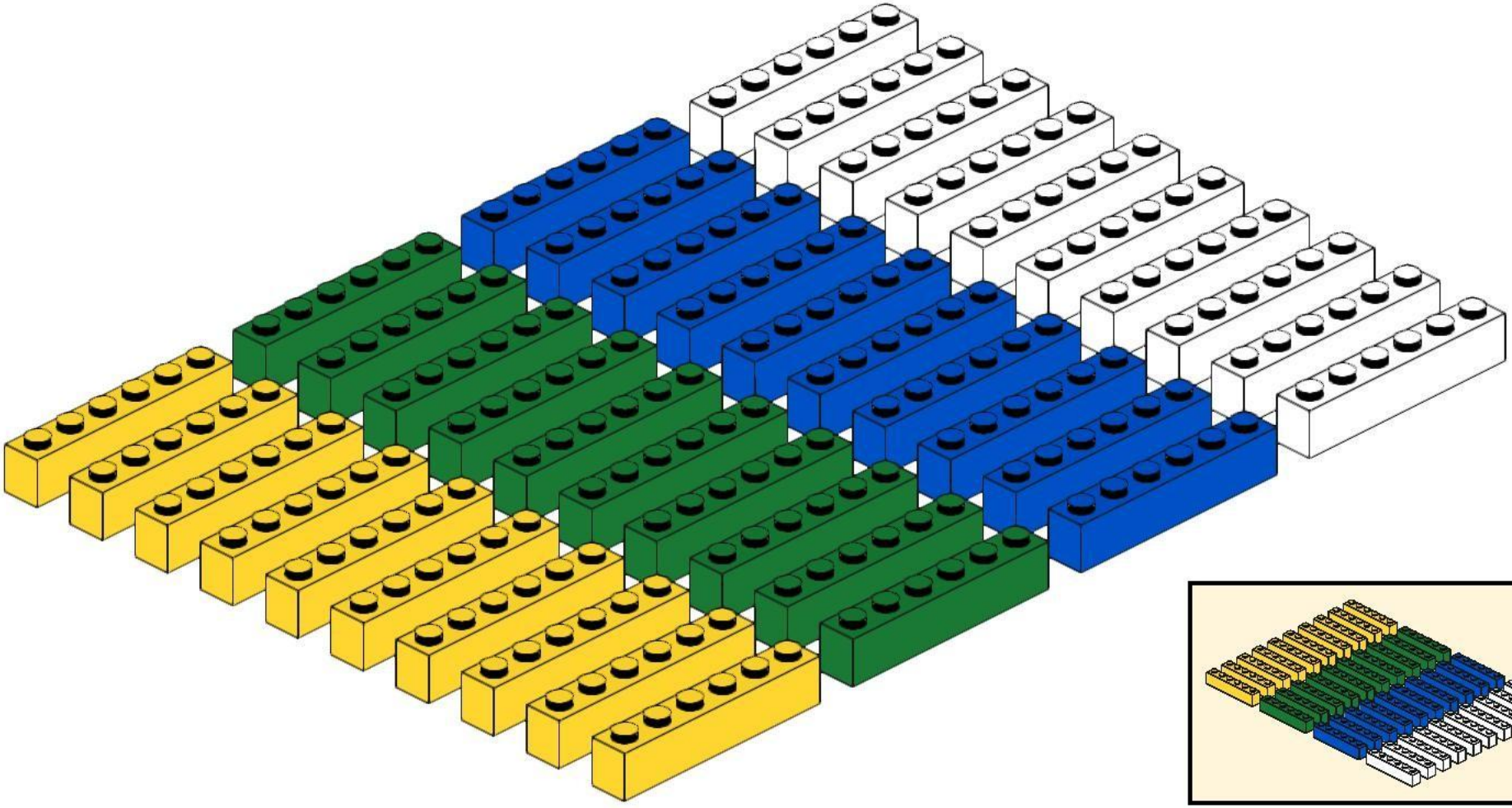

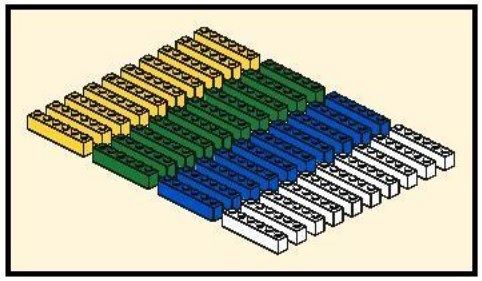

97

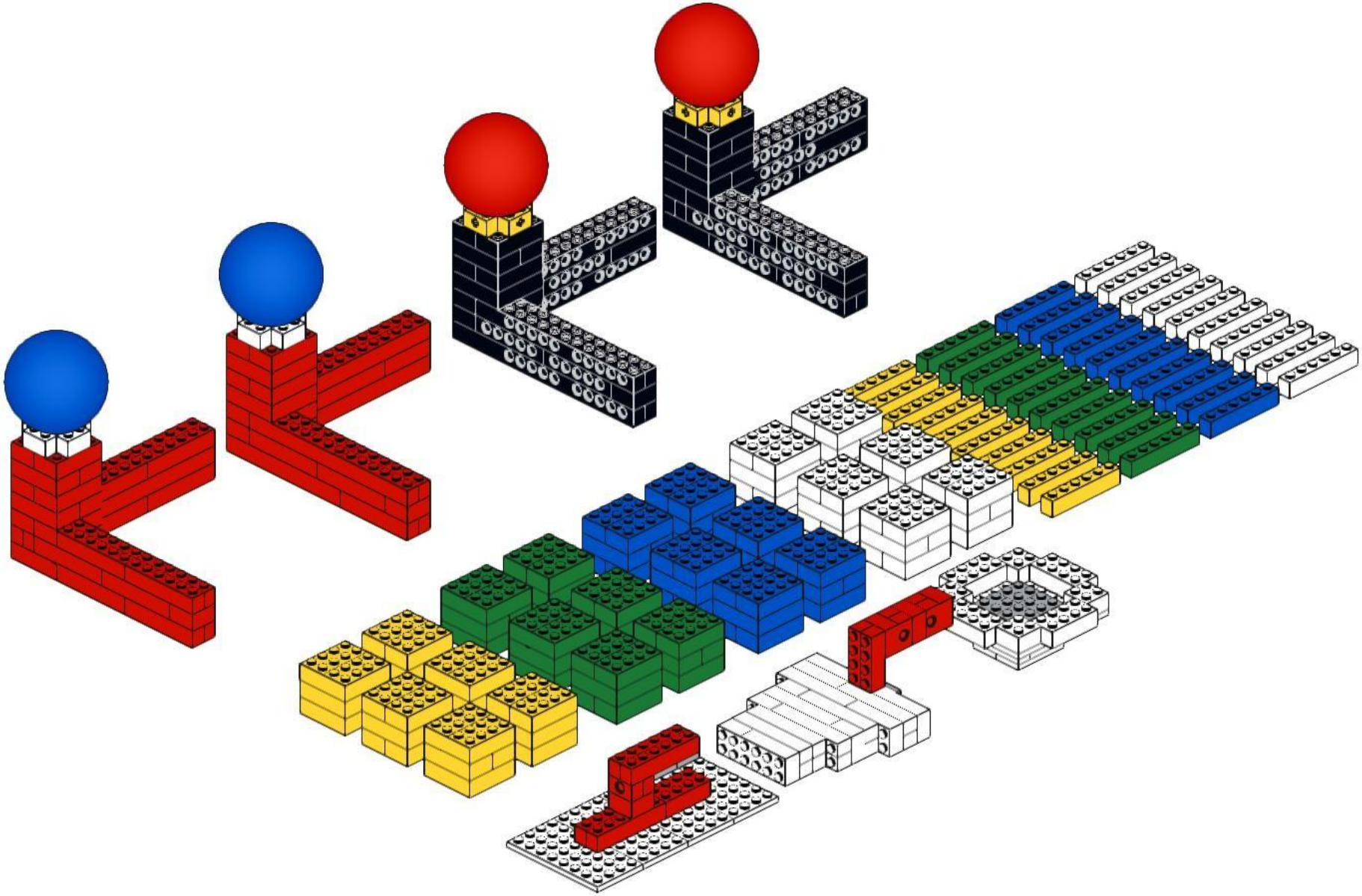

4x
3003
Black

26x
3001
Black

48x
3894
Black

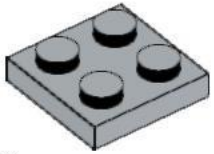

8x
3022
Light Bluish Gray

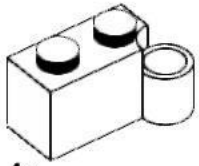

4x
3831
White

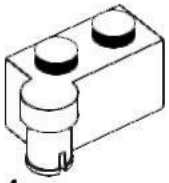

4x
3830
White

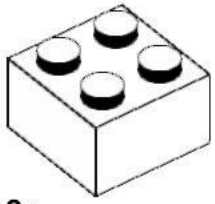

8x
3003
White

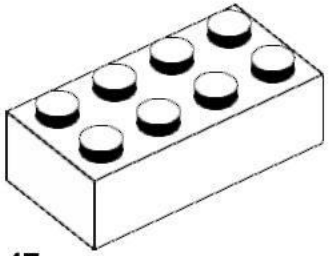

47x
3001
White

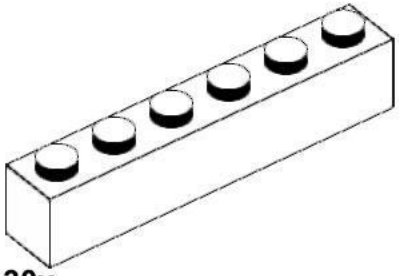

30x
3009
White

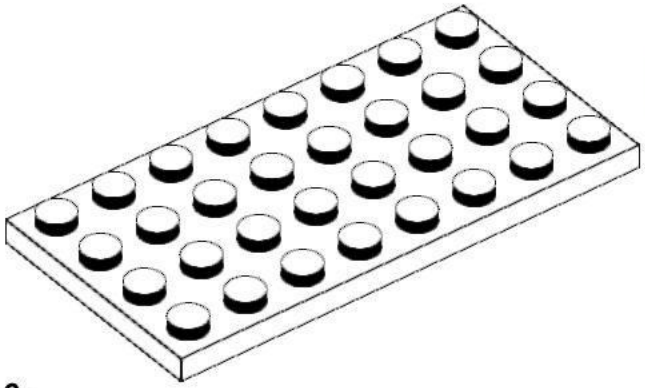

6x
3035
White

6x
3700
Red

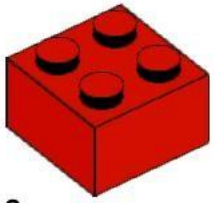

8x
3003
Red

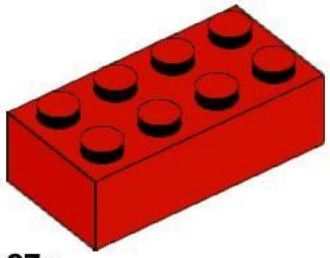

27x
3001
Red

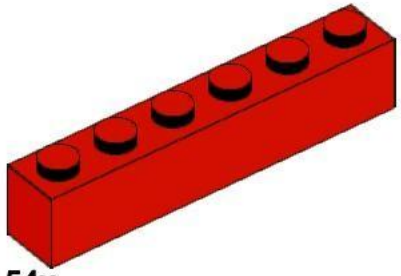

54x
3009
Red

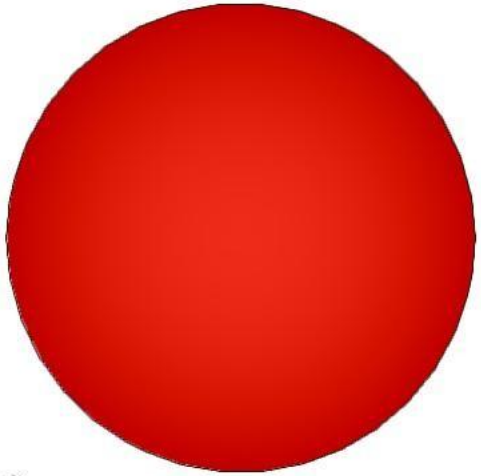

2x
41250
Red

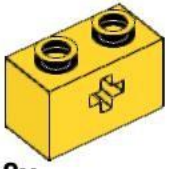

8x
32064a
Yellow

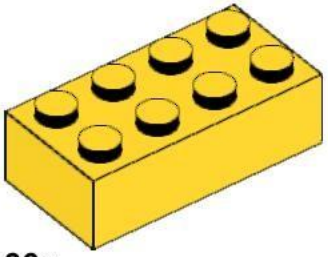

36x
3001
Yellow

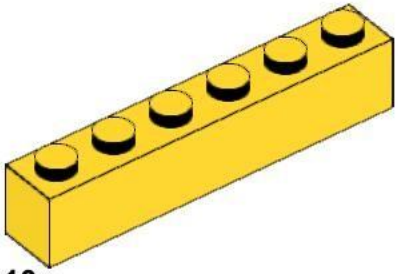

10x
3009
Yellow

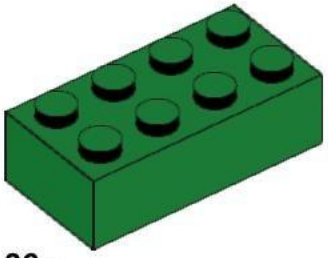

36x
3001
Green

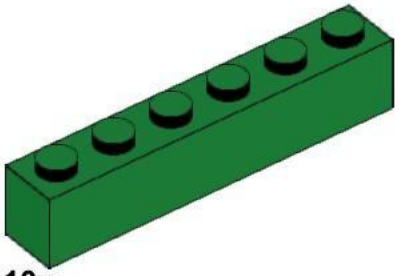

10x
3009
Green

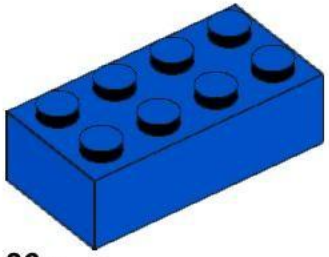

36x
3001
Blue

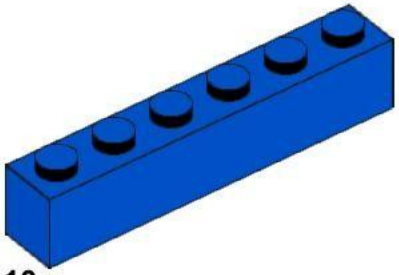

10x
3009
Blue

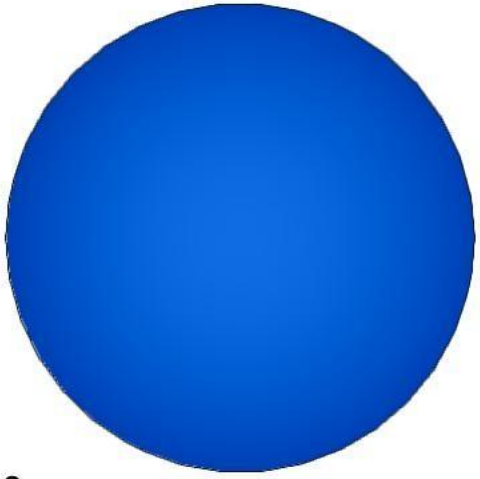

2x
41250
Blue